INFUSION 700E Pro

Instruction Manual

DESIGNED BY
NIGEL BROWN

TSA MODEL

ENDLESS PURSUIT OF PERFECTION

Welcome to the TSA family and congratulations on your new purchase. Please read this instruction manual carefully to ensure you understand every step of the build process. Most of all happy building and we look forward to seeing you around the world at many events.

Contents

★ 1~2. Introduction
★ 3. Safety instructions prior to assembly
★ 4. Tools required for assembly
★ 5~26. Parts assembly
★ 27. Blade tracking adjustment
★ 28~29. Operation mode
★ 30. Flying notes
★ 31~36. Parts package list

INFUSION 700E Pro

www.tsamodel.com

While in flight

1: Beginners should obtain safety and technical guidance from an experienced individual, since learning alone to operate this machine is potentially dangerous.
2: Choose a safe flying area that is free of obstruction and people.
3: Do not fly in a potentially dangerous environment.
4: Do not operate while standing on tilted ground to avoid loss of balance.
5: Do not operate in an awkward body posture. Do not insert hands and objects in rotating parts.
6: Keep a safe distance from the unit and be sure to operate the unit within the limits of your ability. Failure to operate this unit properly may result in serious harm such as physical injury, damages to property, and even death.
7: Enjoy flying while observing safety rules and regulations. Fatigue brought upon by continuous operation may result in impaired judgment that may lead to accidents.
8: Inquiries regarding repairs and services should only be made to TSA authorized dealers or TSA technical support department. Individual lacking proper training or knowledge necessary for repair may not only impair the unit's performance,but also increases the risk of accidents or injury. The engine must be turned off before performing any repairs or adjustments. Repair damaged parts before storage using only TSA manufactured parts. When storing or transporting the units, secure the unit carefully to avoid fuel loss, damage, or injury.

Using battery matters

1: New battery must be charged before use.
2: Battery should not be overcharged . If the battery is heat, stop charging, and take it out immediately..
3: The charge voltage for one cell should not be over 4.20V, and the all 6S battery should not be over 25.2V.Please use reliable and precision charger.
4: It's better not to use the battery over 70% of its voltage, or better to stop flying when the battery is less than 21.6V. This is to keep the performance of the battery,ensure the capacity and charge-discharge cycles.
5: It's battery to keep 3.6V to 3.9V voltage in the battery when store for a long time.
6: For 3D flying, the flying time should not be over 5 minutes.
7: If you are not confidence in charge, please contact with the local distributor.

Pre-flight inspection

1: Check that tools used for assembly and maintenance has been put away.
2: Check that there are no loose screws and parts.
3: Check that the rotor blades are not damaged or cracked, especially in the vicinity of the blade holder.
4: Check that electronic equipment and servos operates smoothly.
5: Check that the position of the transmitter's throttle stick and engine carburetor are at their lowest positions.
6: Check that the receiver receives signals properly.
7: Check and ensure that all necessary parts are sufficiently lubricated.
8: Do not use it in other electric equipments and magnetism place, or they will influence each other.

In-flight safety inspection

1: When starting the engine, be sure to hold the rotor head firmly so the rotor head does not rotate.
2: When taking off, the unit should be positioned at least 15 meters away from the operator. Be sure to check for people and dangerous object in the surrounding area before takeoff.
3: Adjust the tracking right before takeoff. Do not come near more than 5 meters when doing so.
4: Land the unit immediately if abnormal noise or vibration is observed. Then stop the engine and perform complete check for cause of problem.
5: Be responsible when operating this unit, as reckless or improper behavior may cause accidents or injury to self or others. Observe all safety rules and regulation while enjoy operating this unit safely and responsibly.

After-flight safety inspection

1: Immediately inspect parts after every flight. Be sure to replace, retighten any missing or loose screws and replace any damaged parts.
2. Wipe down grease, oil, dirt and dust with a clean cloth.
3: If not fly in long time, please take out the connector between the end of battery and the end of motor.
4: Store the unit in an area free of direct sunlight, or other areas that may result in rise in temperature (e.g., car). Instead, store in a shaded and ventilated area, and keep out of reach of children.

Warning

1: To reduce the risk of accidents and injuries, do not use parts other than those found in this manual or TSA catalog. TSA will not be responsible for problems caused by using non-genuine TSA parts.
2: If the rotor blades should strike the ground during flight, there may be tiny cracks or loosening in various places even though damages may not be clearly visible to naked eyes. If damage to the rotor blade is not fixed before flight, cracks and loosening may increase during flight that would lead to severe consequences. The rotor head may disassemble from the blade holder, which spins at a speed of 1200/2000 rpm, and may fly off from the blade holder. If in doubt regarding the condition of any part, replace the part immediately using only genuine TSA parts.
3: TSA will not be held responsible for damages or crash as a result from any loose screws and/or improper maintenance.
4: Radio wave transmitting distance is approximately one kilometer or more, therefore operator must check no other operators in the surrounding vicinity are using the same radio frequency.
5: This remote control model is not a toy, rather a precise machine. Proper assembly and adjustments must be made in order to avoid the risk of injuries or accidents. Operator should operate this unit safely and properly. Failure to operate this unit properly may result in serious harm such as physical injury, damages to properties, and even death. The operator is responsible for all damages, because TSA cannot control how the unit was assembled and used.
6: Recommended 14+ years .

Caution

Please abide by regulations in your country while enjoying the pleasure brought to you by the TSA 700E series.

Preassembly precautions

1. Before assembly, read the instruction manual thoroughly and familiarize yourself with the unit's structure and assembly procedures. Failure to assemble the unit properly may not only impair performance but also increases the risk of danger.

2. Before assembly, check description and quantity of parts. In the event of missing or defective items, contact retailer of original purchase where authorized distributor or TSA support department can be located.

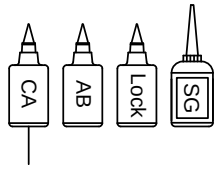

Self-furnished

CA=Cynoacrylate adhesive
AB=5 minute expoxy / A=3 : B=1
Lock=Thread lock
SG=Silicone grease

Diagram for applying thread lock

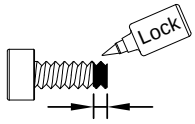

Glue width :1.5mm

3. Apply lubricant and retainers on locations as indicated .

4. In the instruction manual, refer to the left hand column to check the type and quantity of parts.

Swashplate Assembly

T-016-06

Parts order number

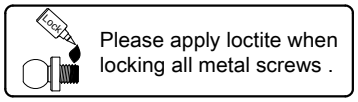

Please apply loctite when locking all metal screws .

Part name and quantity in this diagram is to 1:1 ratio

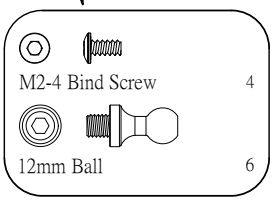

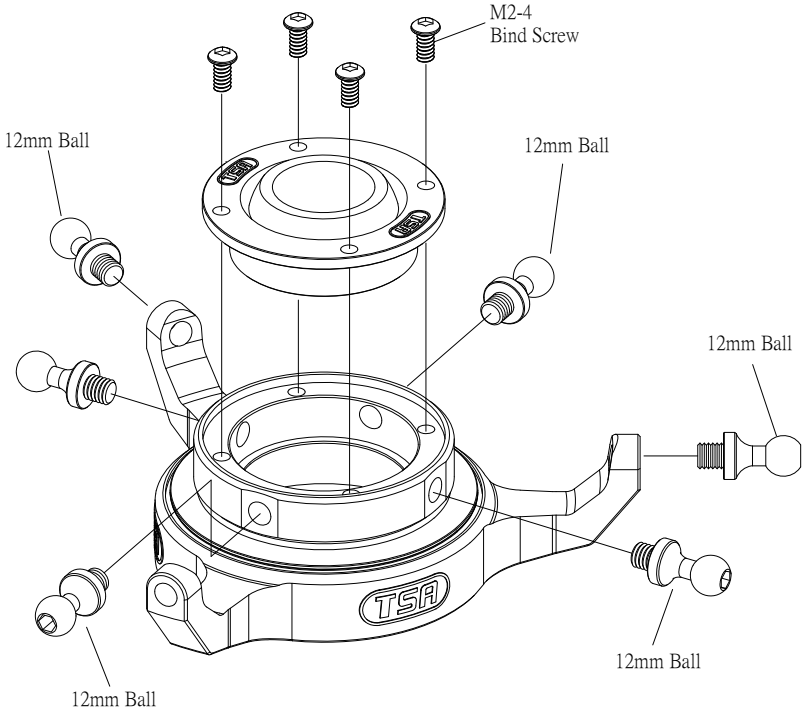

Assembly Tip

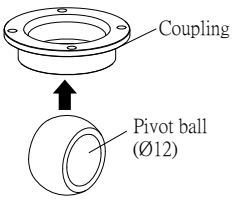

Insert pivot ball in the above illustrated orientation. The ball will clip in and centralise easily.

TOOLS REQUIRED FOR ASSEMBLY

1

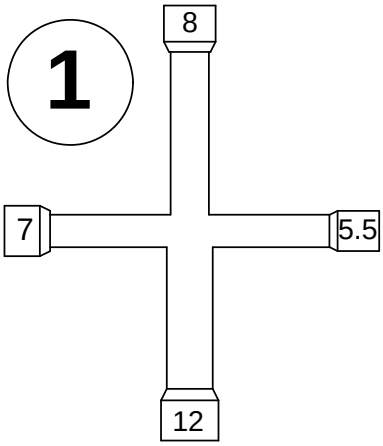

Cross wrench
(5.5~12)

2

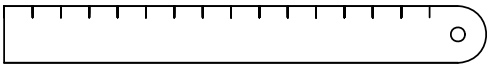

Metric ruler
(Over 30cm)

3

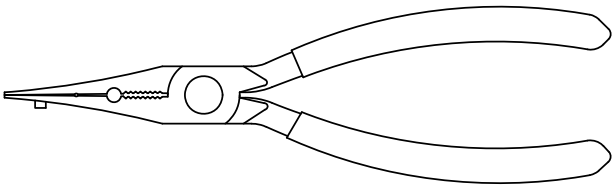

Universal ball link plier

4

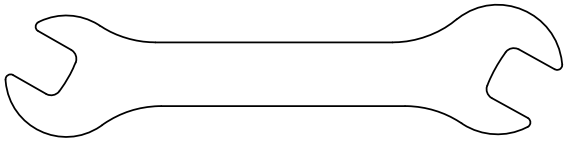

Spanner
(6mm/8mm/12mm/21mm)

5

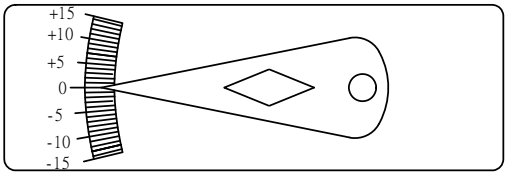

Pitch gauge

6

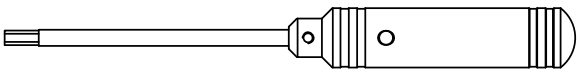

(Allen head) Screw drivers
(1.5mm/2mm/2.5mm/3mm/3.5mm/
4mm/5mm)

Equipment required for assembly

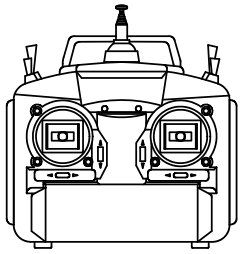

Transmitter(7 channels)

Receiver

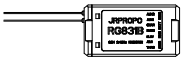

Receiver battery

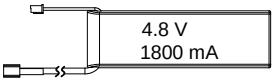

3 Axis gyro system

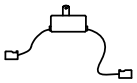

On/off switch

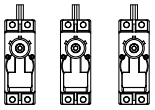

Servos

Rudder servo

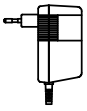

Charger

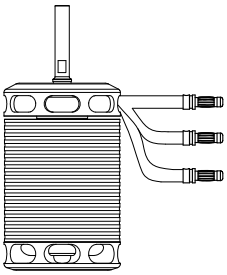

4500~11000W /
500~550KV
Brushless motor x1

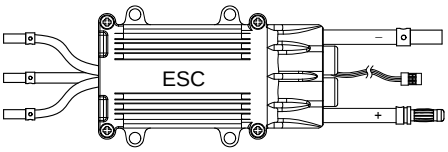

SBH-120A Brushless ESC x1

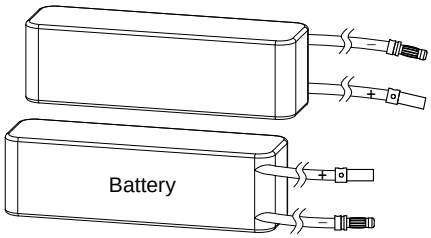

6S LiPo 4000~5000mAh x2

1 Main Frame Assembly-1

T-001-19
T-005-00
T-007-03

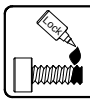

Please apply loctite when locking all metal screws .

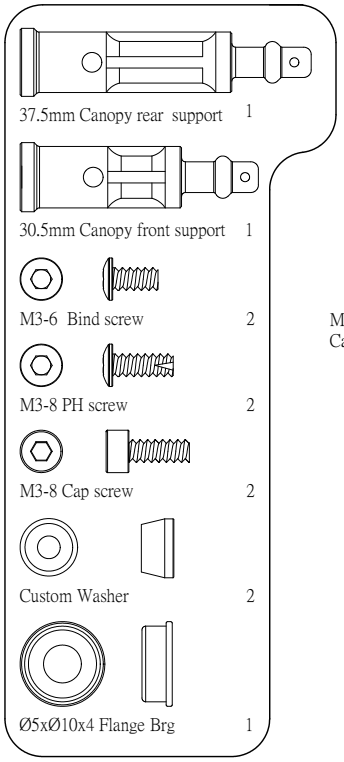

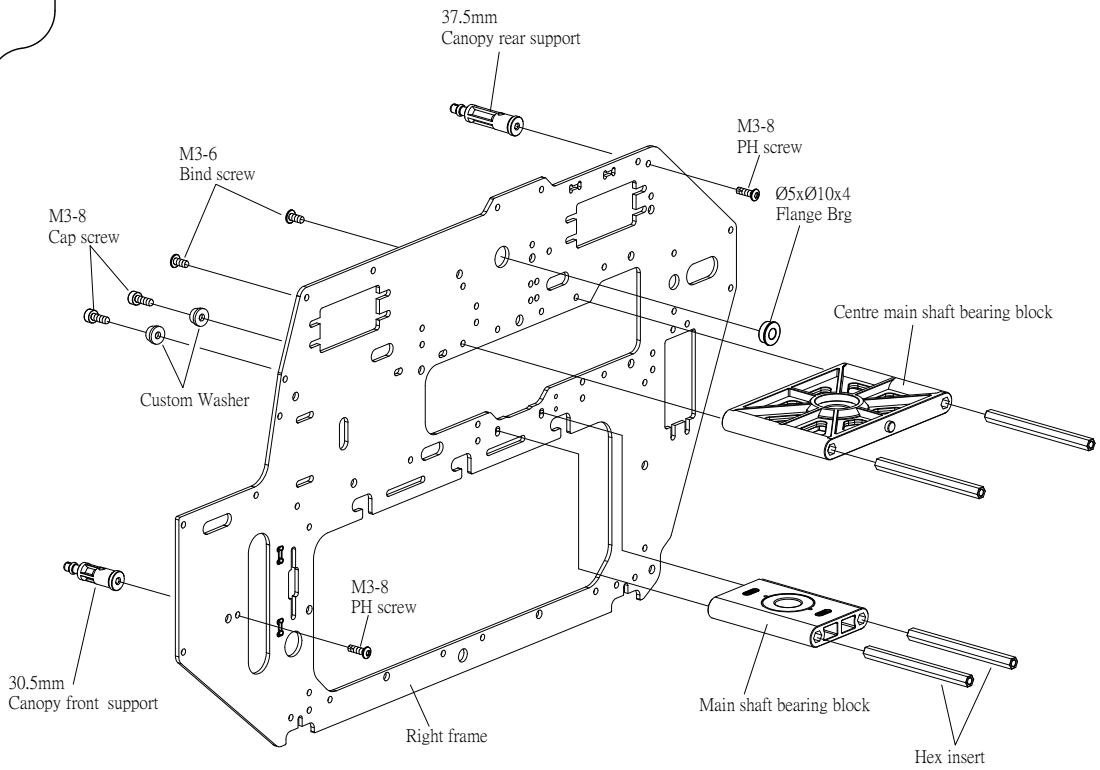

2 Main Frame Assembly-2

T-002-06 T-022-00
T-005-00
T-009-02

Please apply loctite when locking all metal screws .

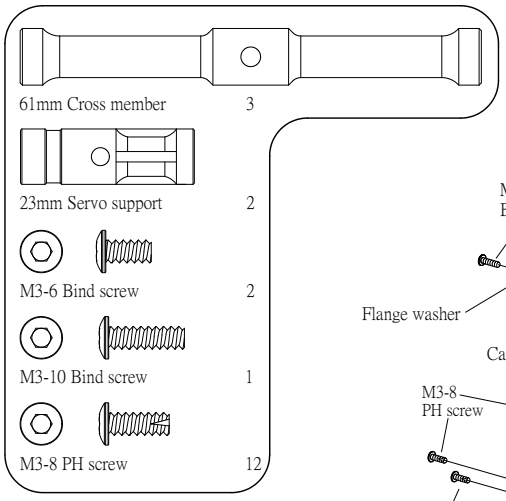

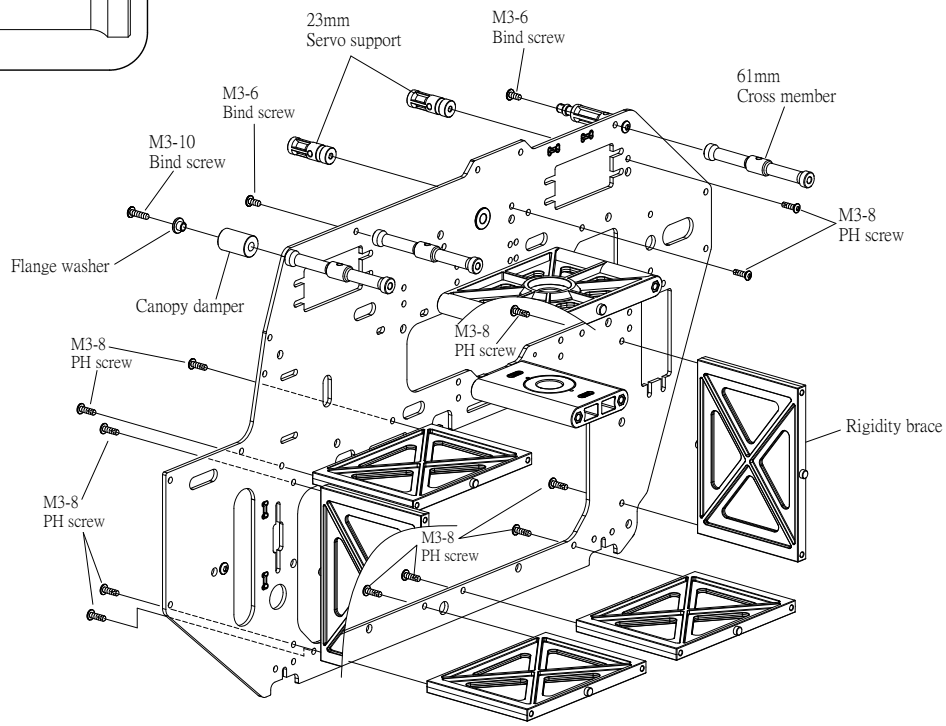

3 Tail Drive Gear Assembly

T-019-00

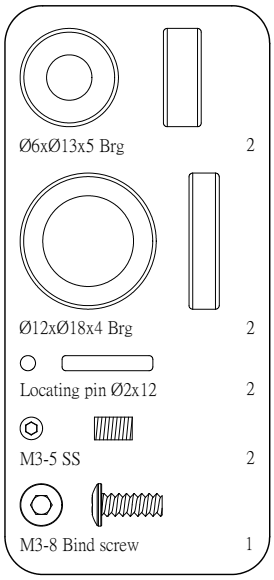

Please apply loctite when locking all metal screws .

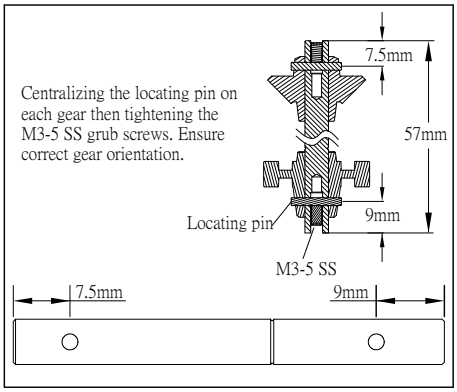

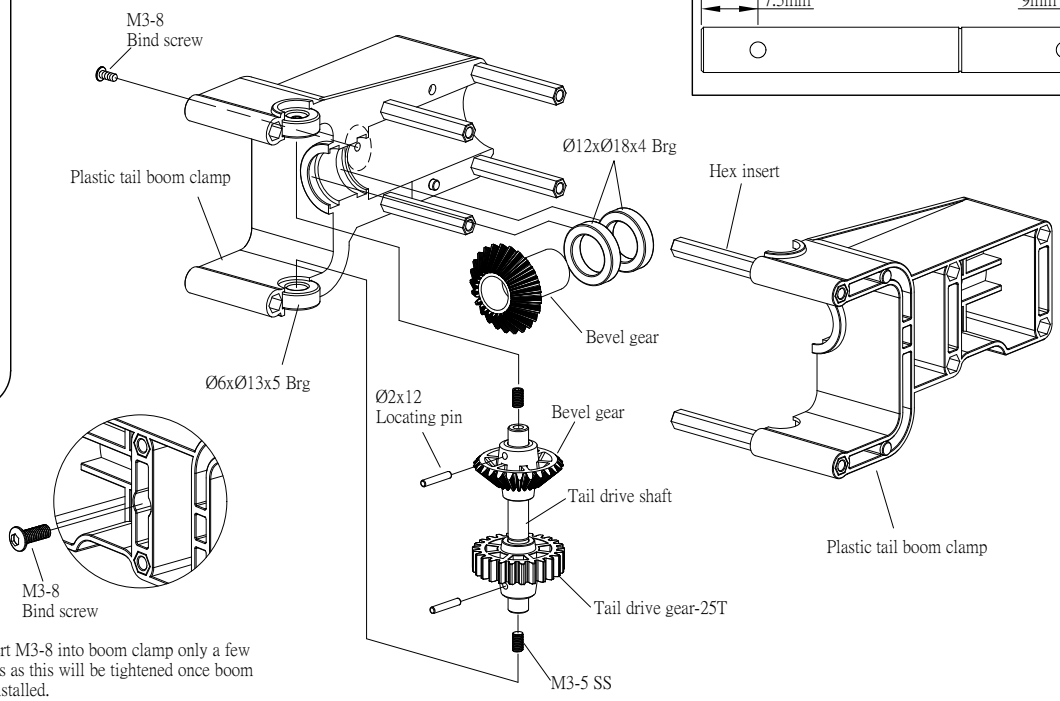

Insert M3-8 into boom clamp only a few turns as this will be tightened once boom is installed.

4 Main Frame Assembly-3

T-001-18
T-005-00
T-022-00

Please apply loctite when locking all metal screws .

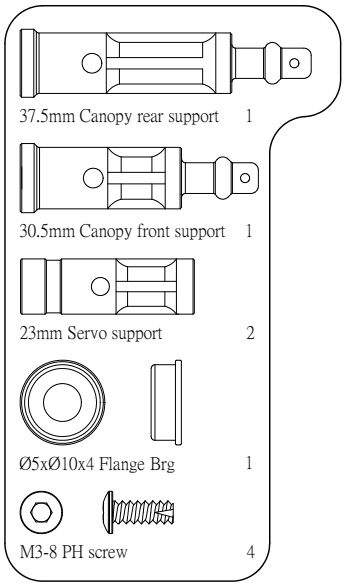

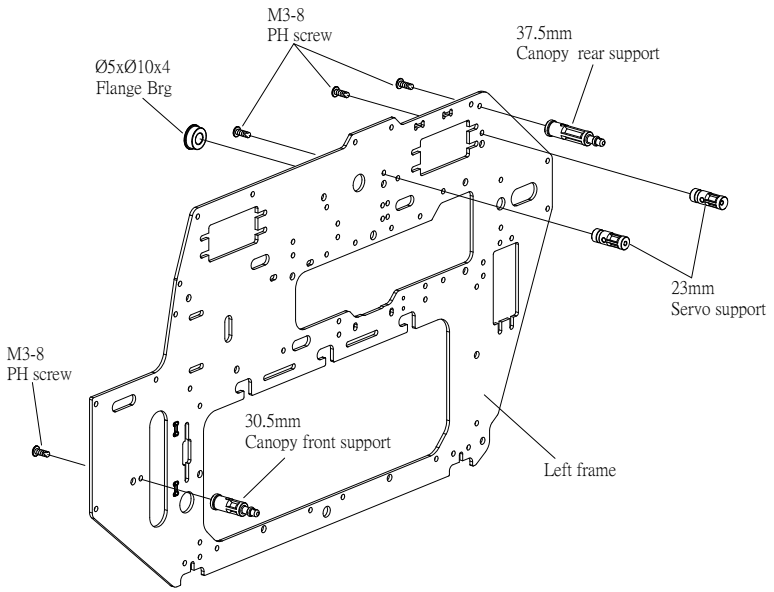

5 Main Frame Assembly-4

T-002-06
T-004-00
T-005-00
T-009-02
T-019-00

Please apply loctite when locking all metal screws .

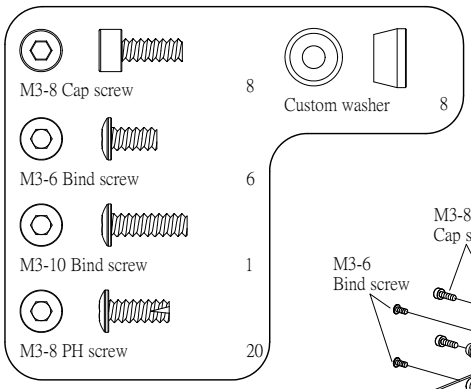

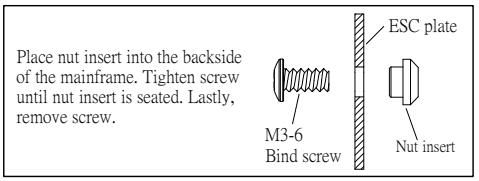

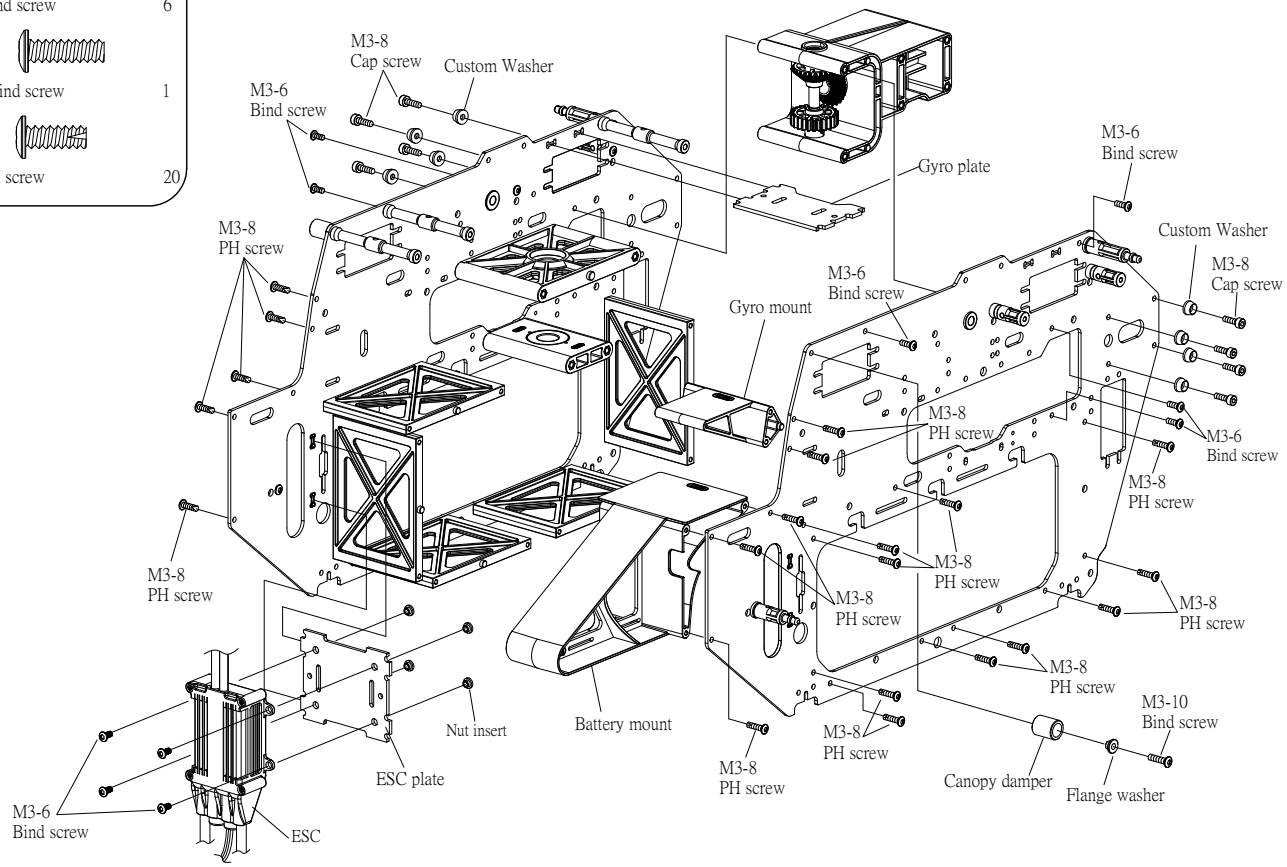

6 Landing Gear Assembly-1

T-012-00
T-013-01

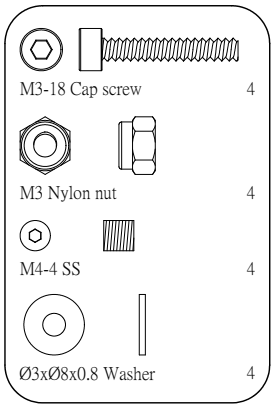

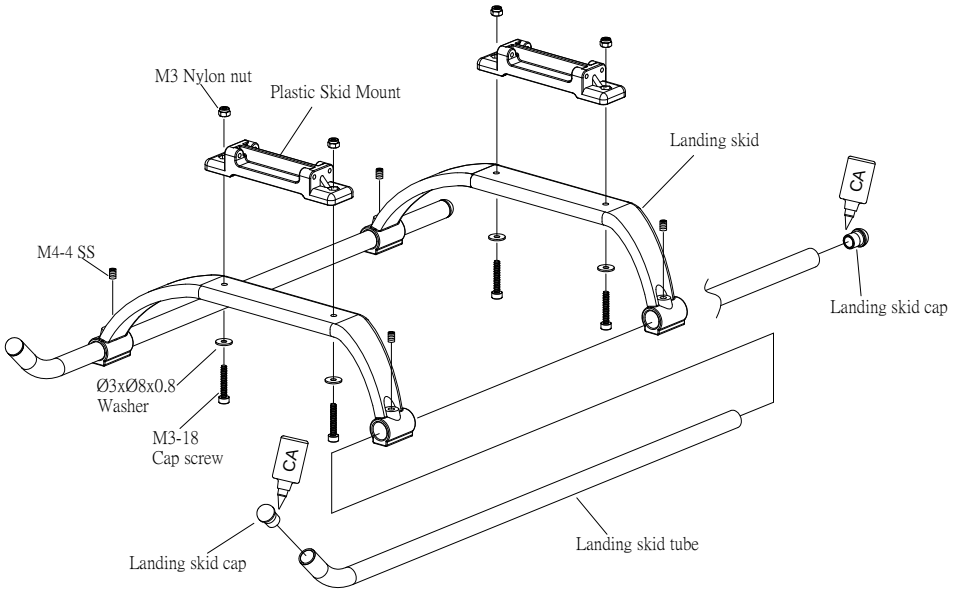

7 Landing Gear Assembly-1

T-002-06 T-012-00
T-007-03 T-030-04
T-008-00 T-030-06

Please apply loctite when locking all metal screws .

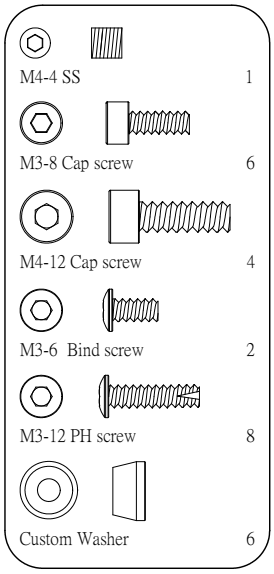

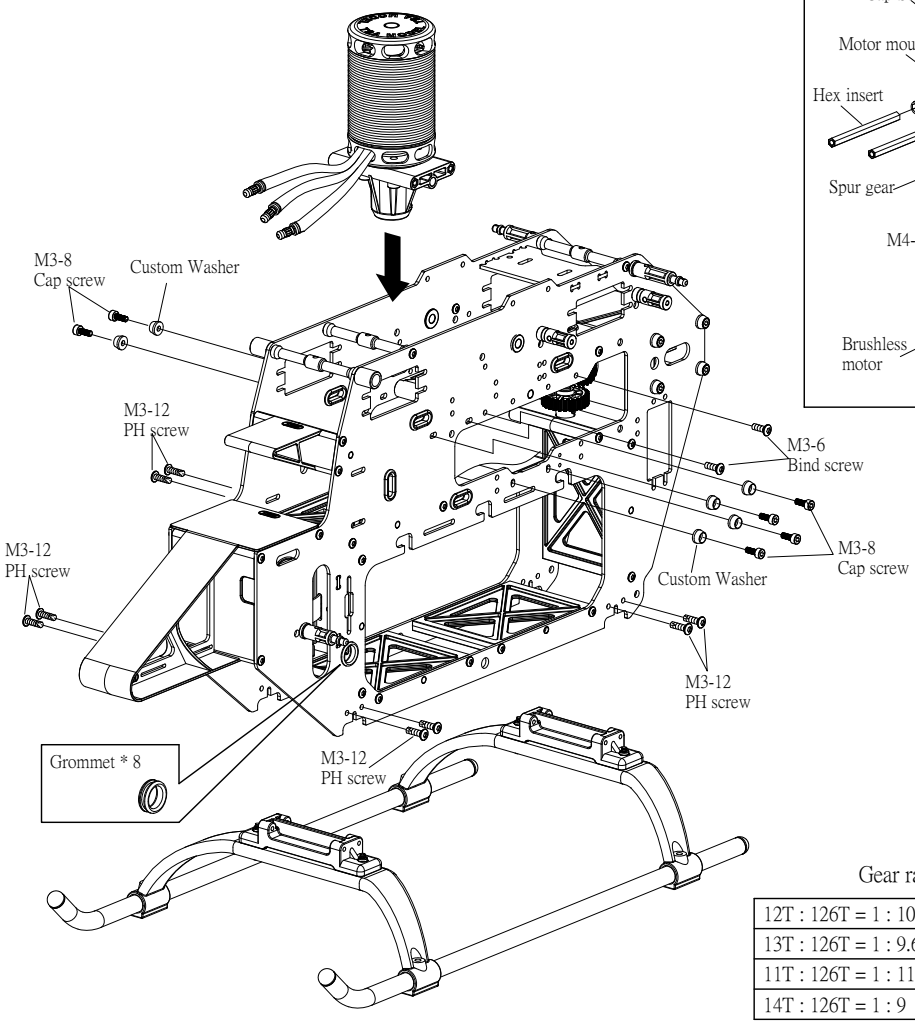

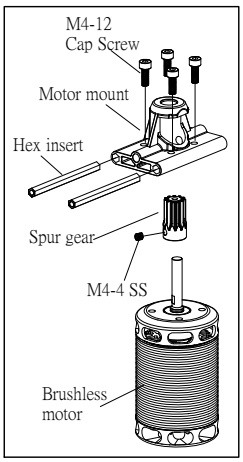

Gear ratio

12T : 126T = 1 : 10.5	Standard
13T : 126T = 1 : 9.69	
11T : 126T = 1 : 11.45	Not included
14T : 126T = 1 : 9	

8 Elevator Lever Assembly

T-011-10

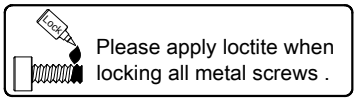

Please apply loctite when locking all metal screws .

M2-8 Cap screw	2
M3-6 Bind screw	3
M3-8 Bind screw	4
M3-4 SS	1
M4-4 SS	2
5.7mm Ball	2
M2 Nut	2
Spacer Ø3xØ4.2x1.25	1
Spacer Ø3xØ4.2x0.5	2
Ø3xØ6x2.5 Flange Brg	4
Ø3xØ6x2.5 Brg	2
Locating pin Ø2x11	1

Anti-Rotation Elevator Lever (ARE)

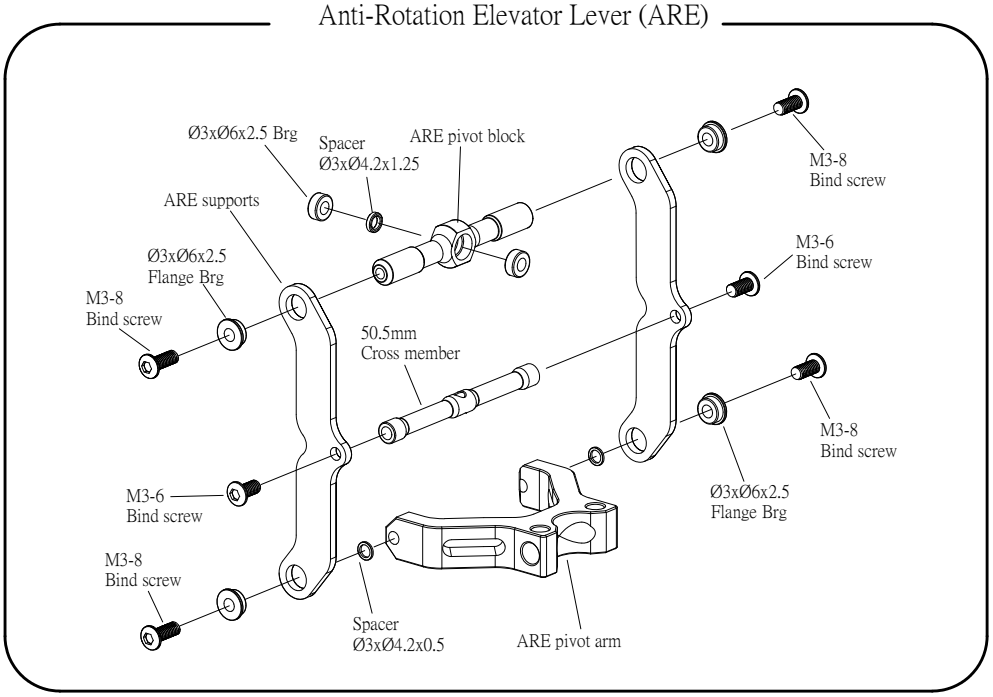

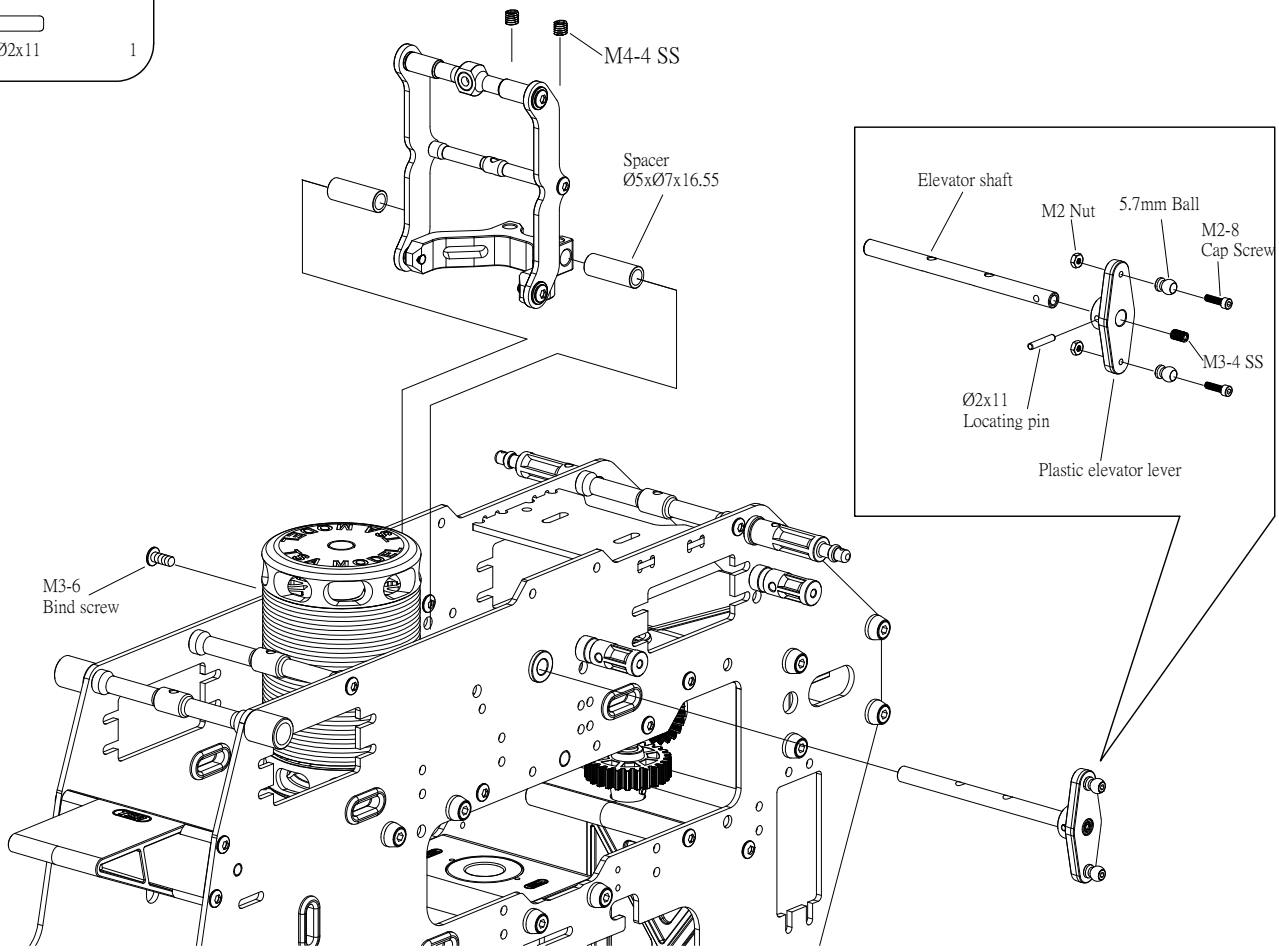

9 Servo Assembly

T-024-01

Caution

Note the orientation of the servos as both the elevator and throttle servo are mounted inside the main frames

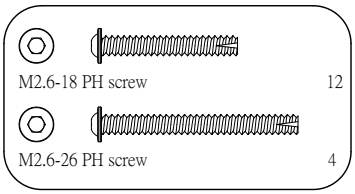

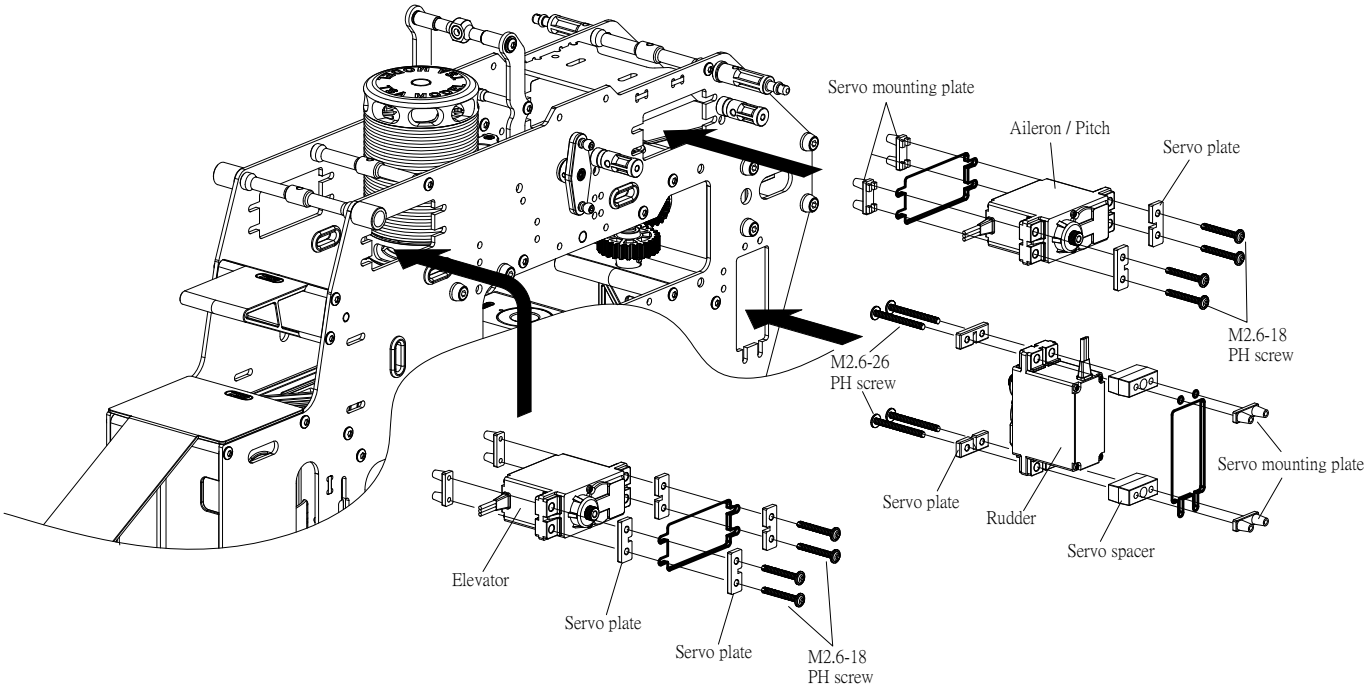

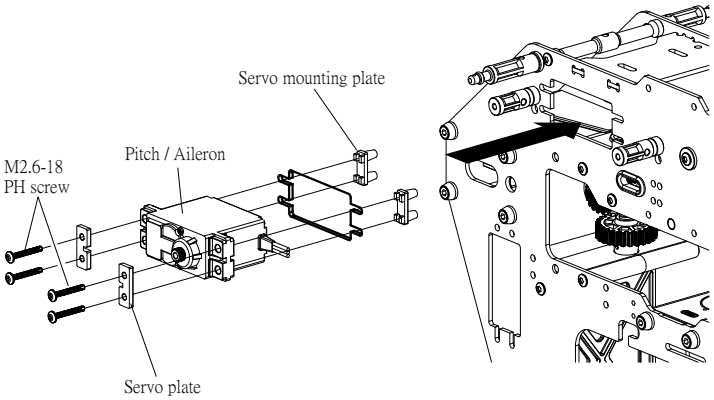

Caution

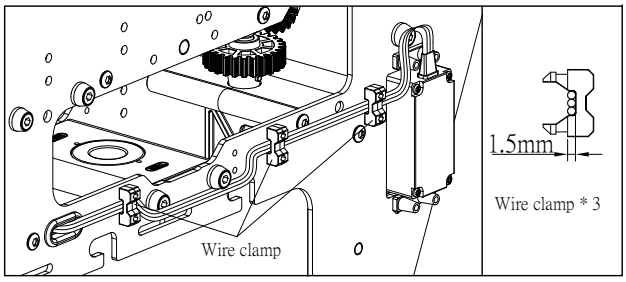

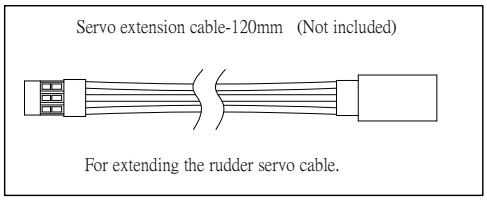

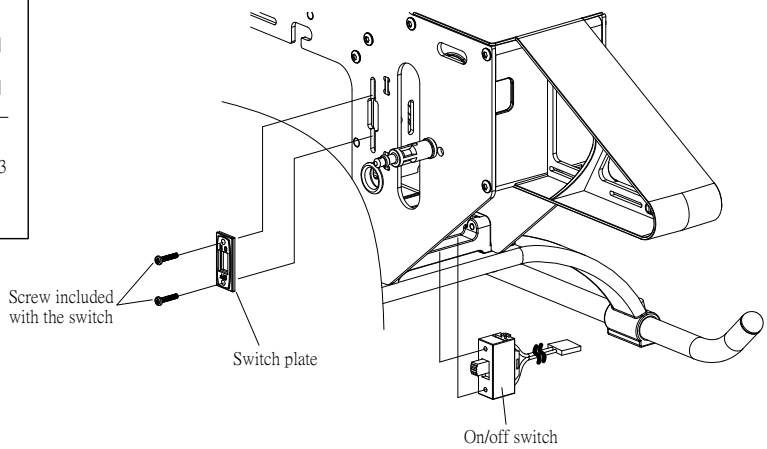

10 Servo Support Assembly

T-020-02
T-022-00
T-025-00

Please apply loctite when locking all metal screws .

M2-8 Cap screw	2
M2.6-12 Bind screw	2
M3-12 Bind screw	2
M3-8 PH screw	4
Ø4xØ7x2.5 Flange Brg	2
Servo support guide Ø3xØ6x7	2
5.7mm Ball	2
13mm Ball	2
M2 Nut	2
Ball link-long (23mm)	4

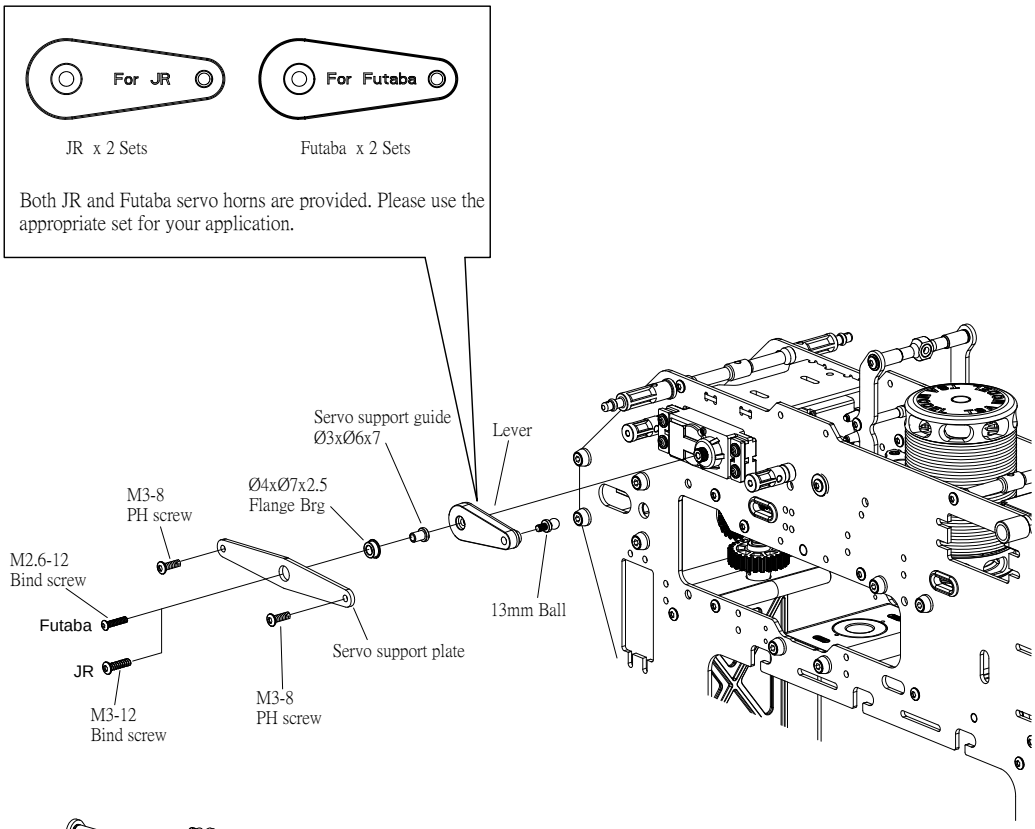

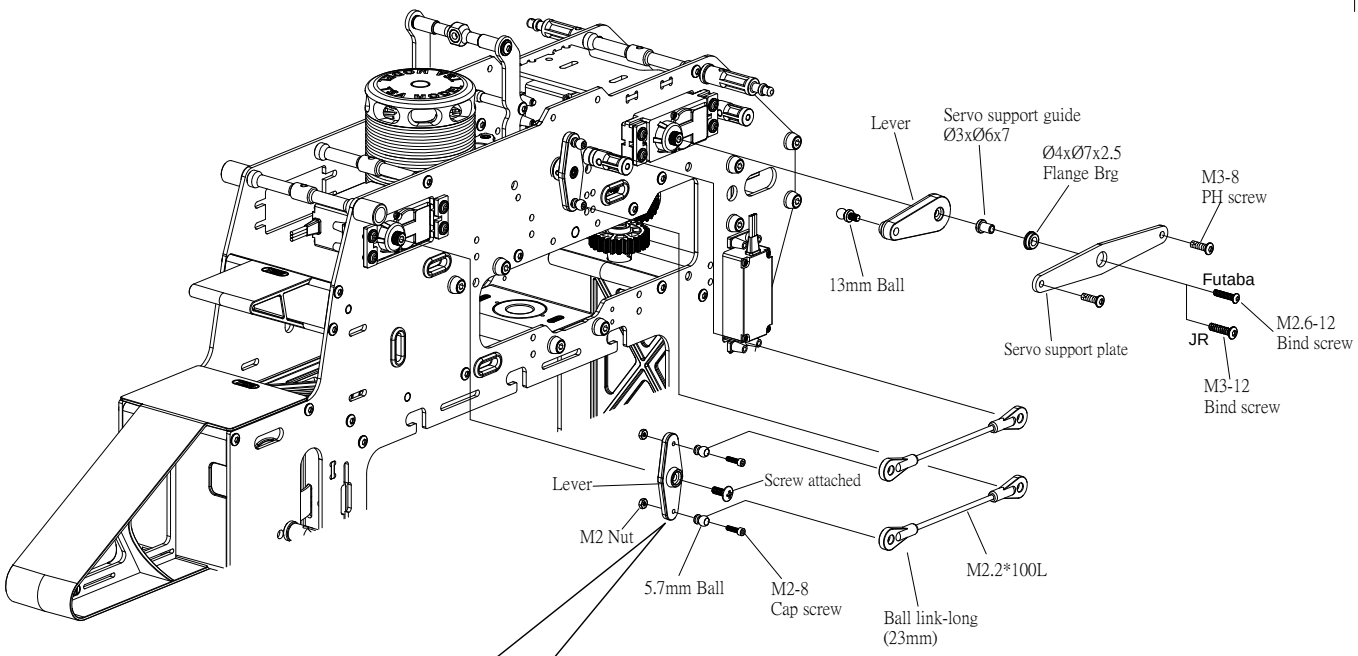

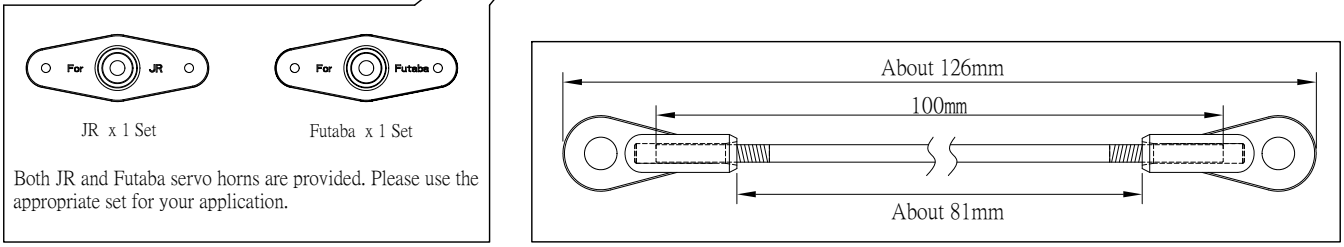

11 Main Gear Assembly

T-007-03
T-015-08

Please apply loctite when locking all metal screws .

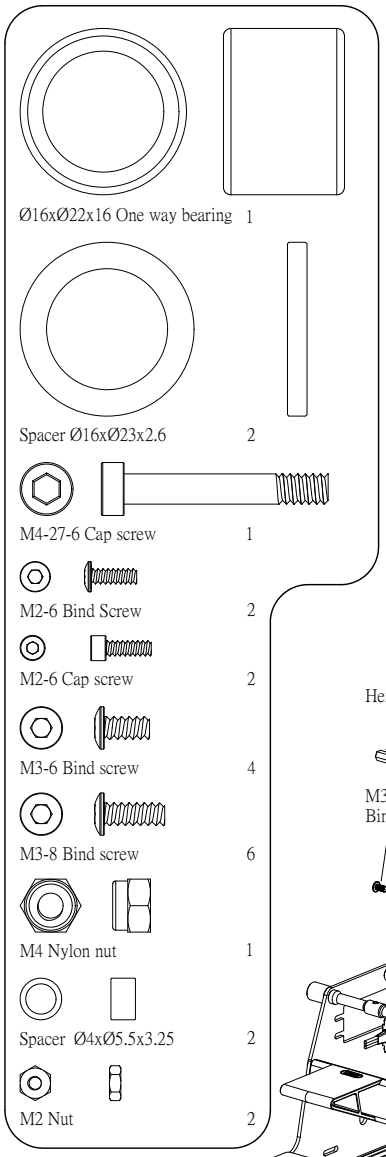

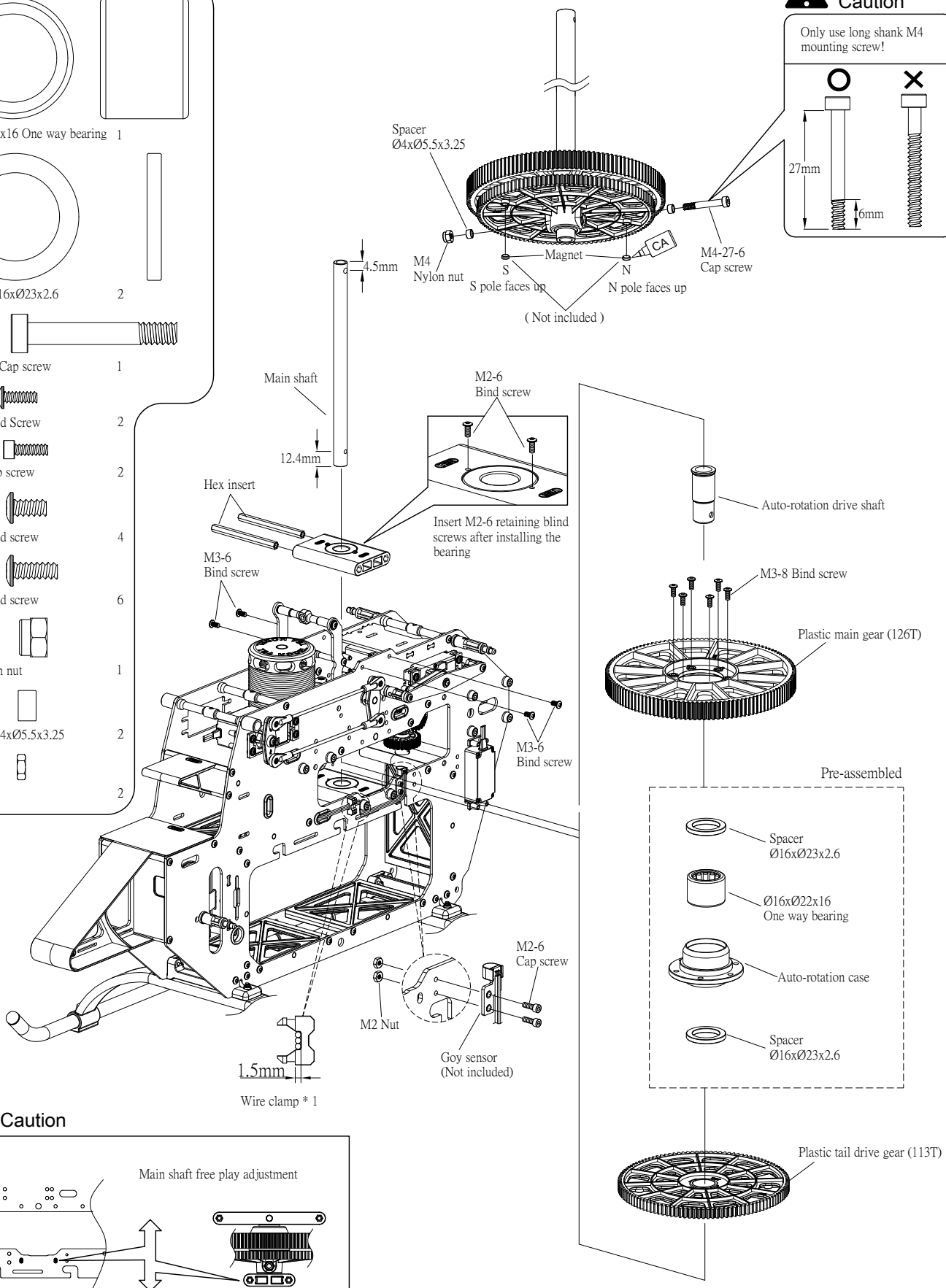

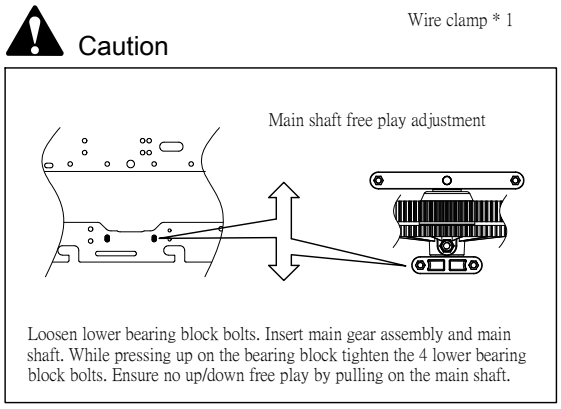

12 Swashplate Assembly

T-016-06

Please apply loctite when locking all metal screws .

M2-4 Bind Screw	4
12mm Ball	6

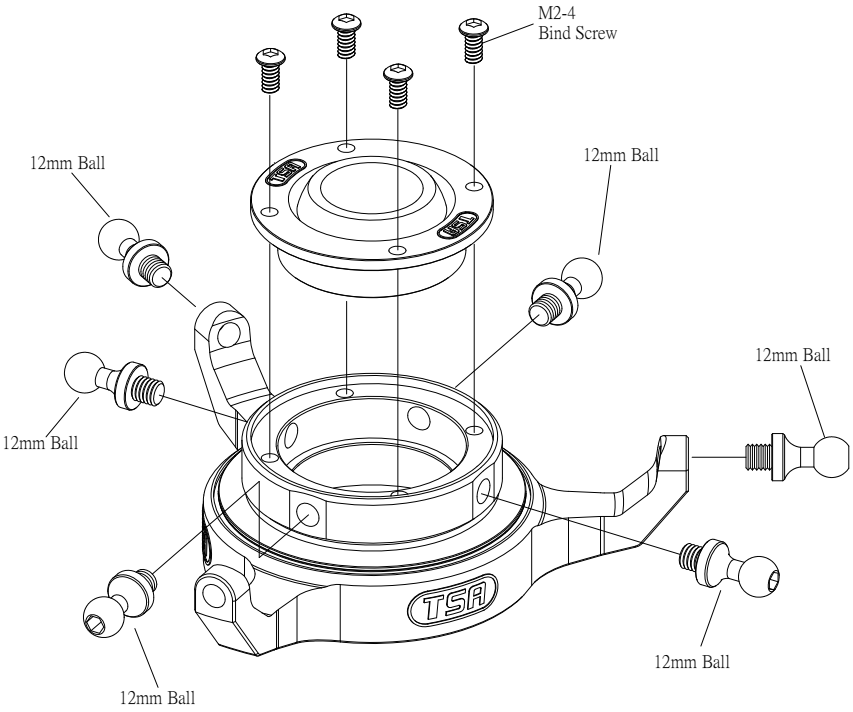

Assembly Tip

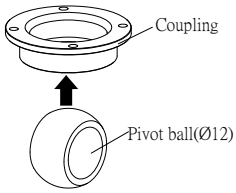

Insert pivot ball in the above illustrated orientation. The ball will clip in and centralise easily.

13 Washout Assembly

T-016-06

Please apply loctite when locking all metal screws .

M2-6 Bind Screw	4
M3-20 Bind screw	2
Spacer Ø2xØ3.2x0.9	4
Spacer Ø3xØ4.2x3.2	2
Spacer Ø3xØ4.5x6.2	2
Ø2xØ5x2.3 Brg	4
Ø3xØ7x3 Brg	4

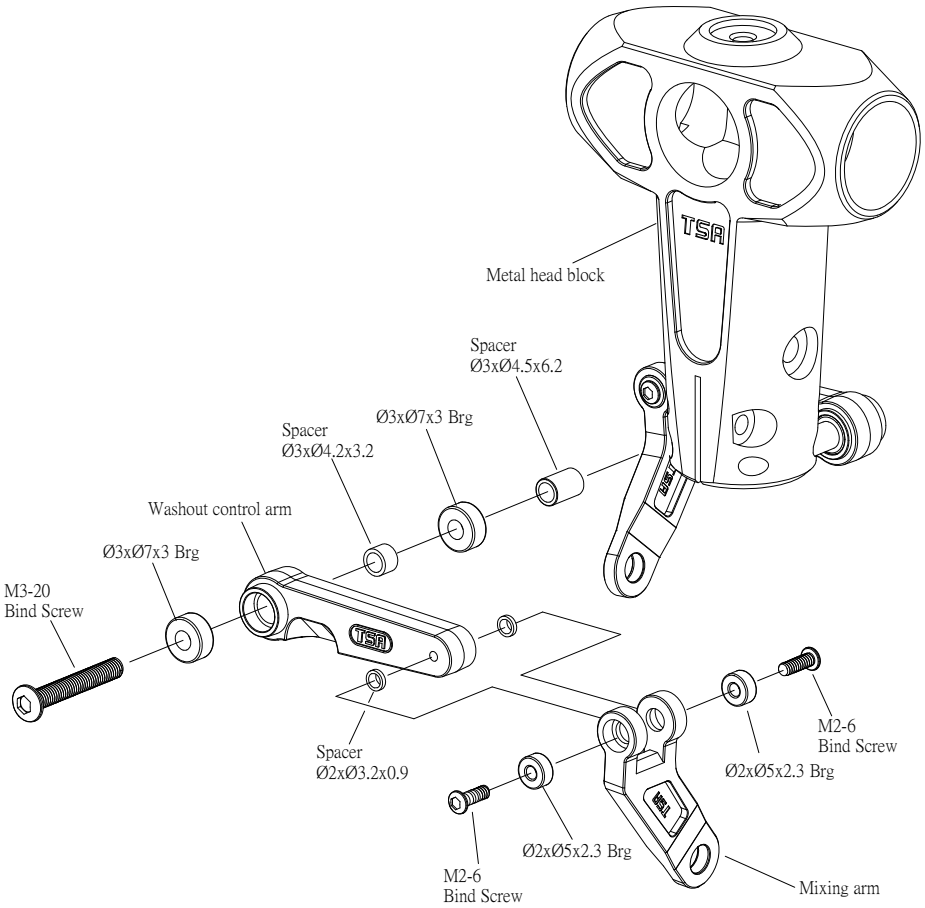

14 Pitch Arm Assembly

15mm Ball 2

Please apply loctite when locking all metal screws .

T-016-06

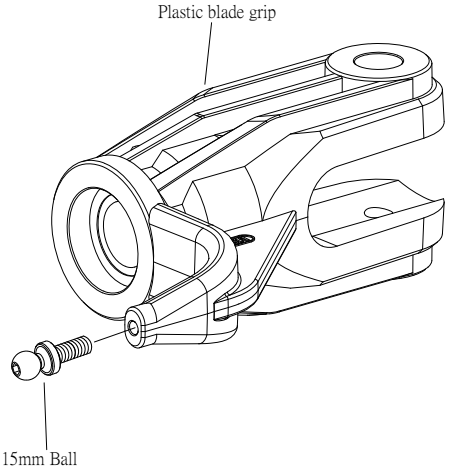

Caution

Two must be assembled

15 Head Block Assembly

M3-6 Bind screw 2

M3-12 Bind screw 1

Please apply loctite when locking all metal screws .

T-016-06

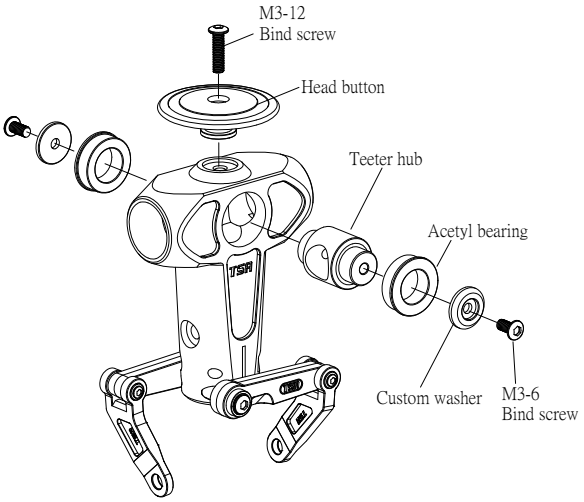

16 Blade Holder Assembly

Please apply loctite when locking all metal screws .

T-016-06

Caution

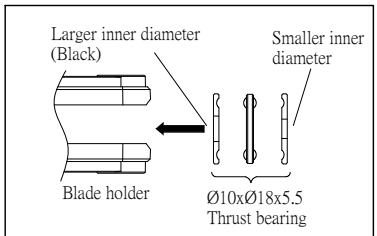

Note direction of bearings!

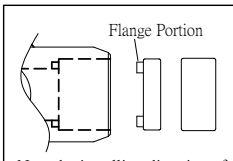

Note the installing direction of the feathering shaft guides and spindle bearing spacer.

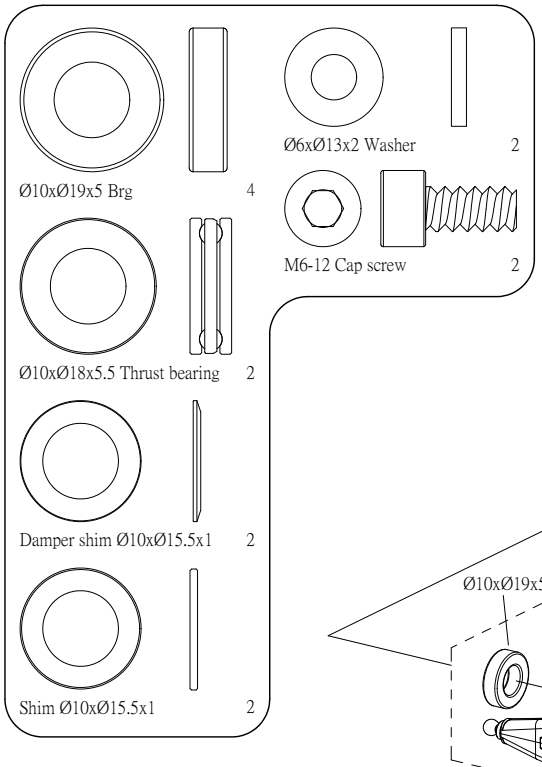

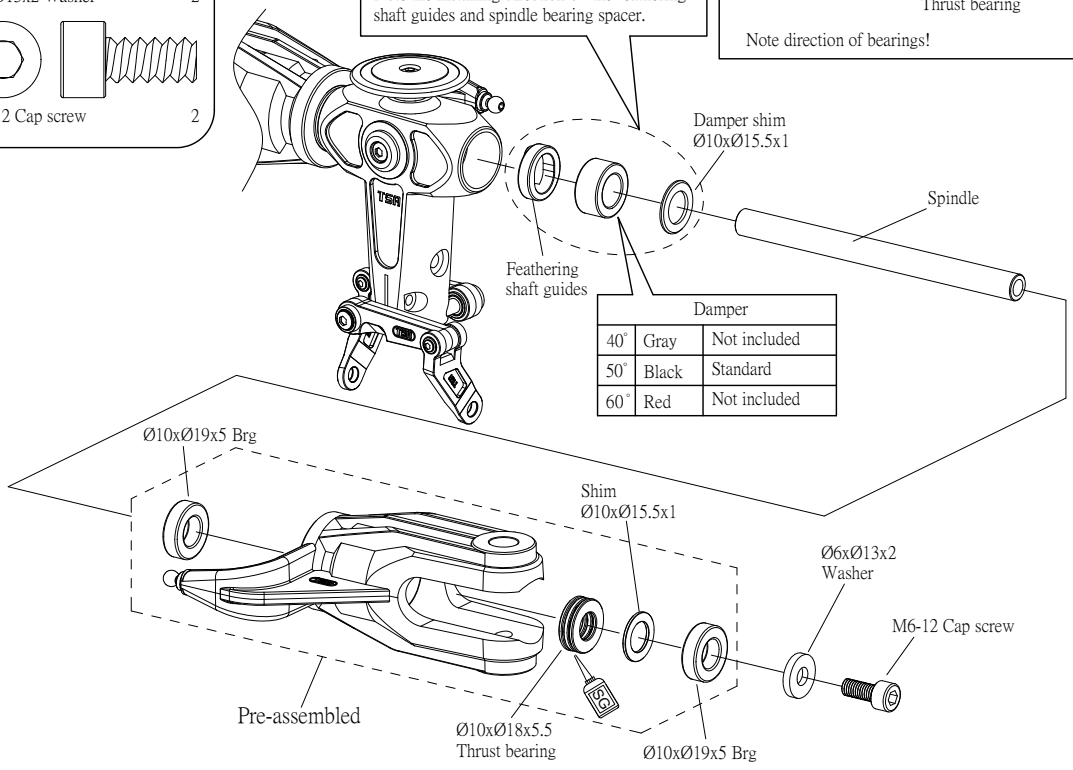

Damper		
40°	Gray	Not included
50°	Black	Standard
60°	Red	Not included

17 Rotor Head Complete Assembly

T-011-10
T-016-06
T-020-02

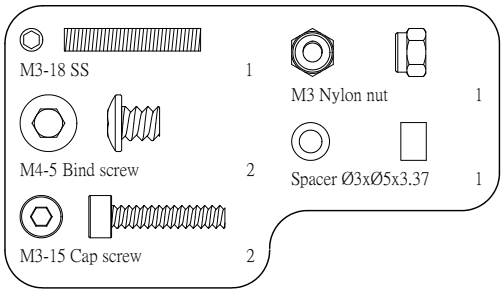

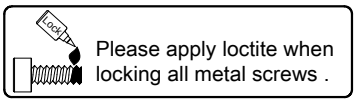

Please apply loctite when locking all metal screws .

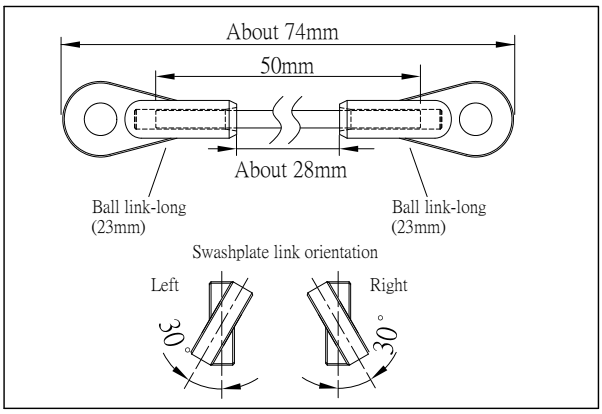

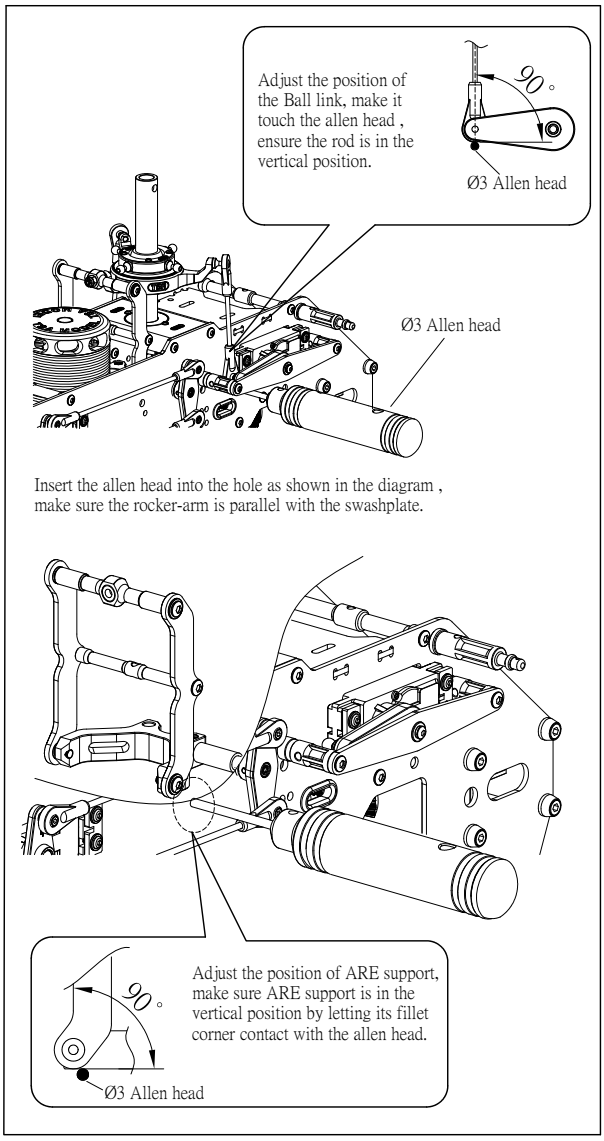

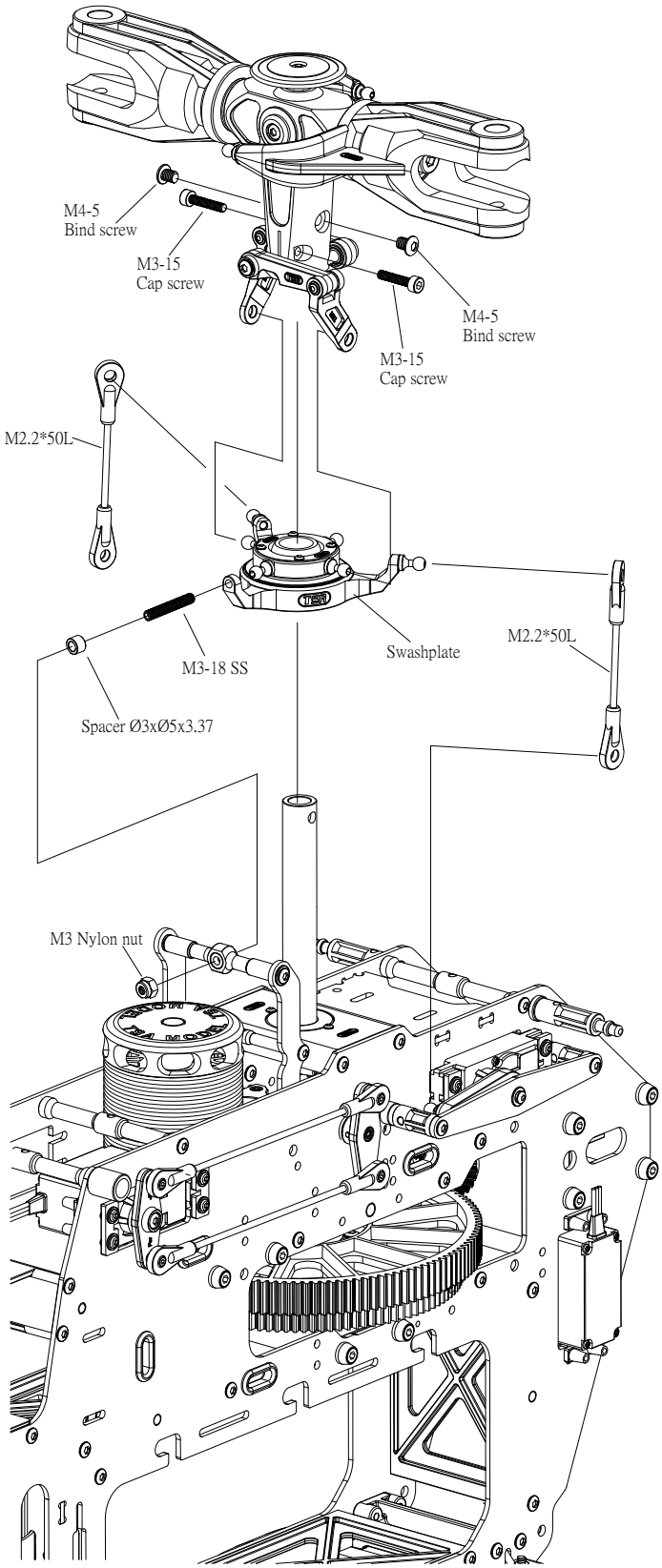

18 Tail Gearbox Assembly-1

T-016-06

Please apply loctite when locking all metal screws .

M3-3 SS	1
M3-5 SS	1
M3-12 Cap screw	5
Locating pin Ø2x12	1
M3 Nylon nut	5
Ø3xØ6x0.5 Washer	5
Ø6xØ12x4 Brg	2
Ø12xØ18x4 Brg	2

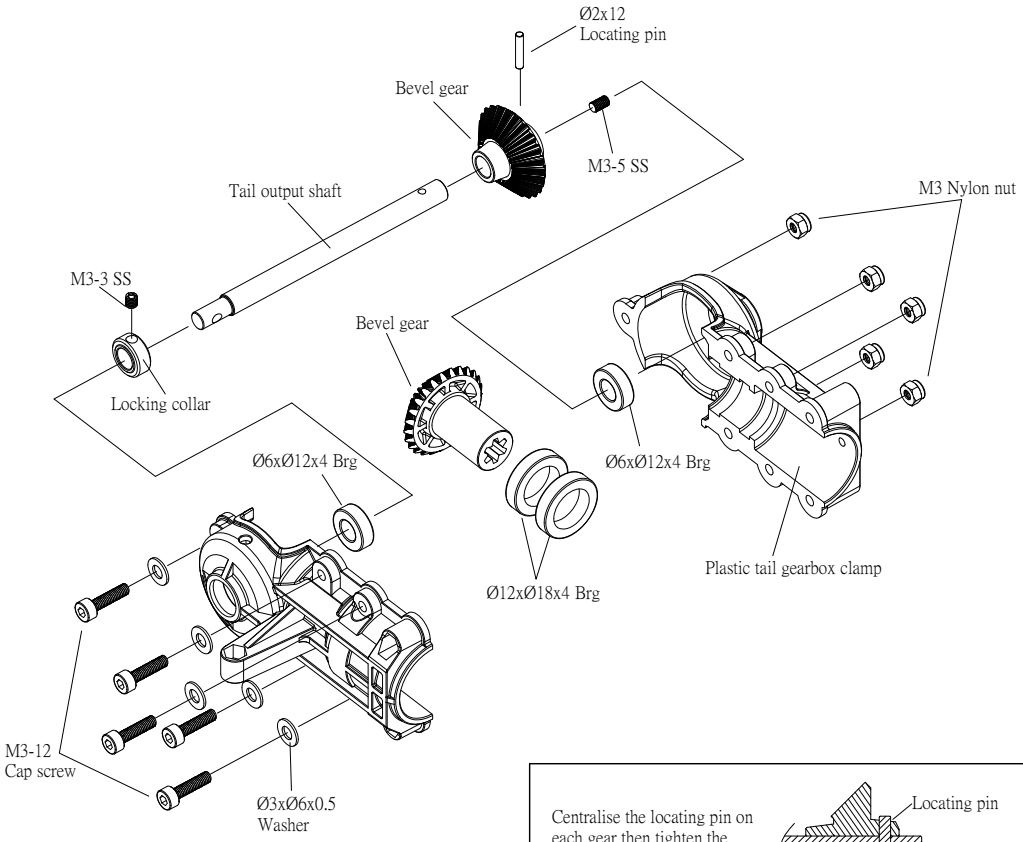

Centralise the locating pin on each gear then tighten the M3-5SS grub screws. Ensure correct orientation.

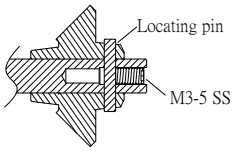

19 Tail Gearbox Assembly-2

T-017-00

Please apply loctite when locking all metal screws .

M2-6 Cap screw	1
M2-8 Cap screw	2
5.7mm Ball	1
Ø2xØ4.2x0.5 Washer	2
M2 Nut	2
Spacer Ø8xØ9x3.5	1
Ø8xØ12x3.5 Brg	2

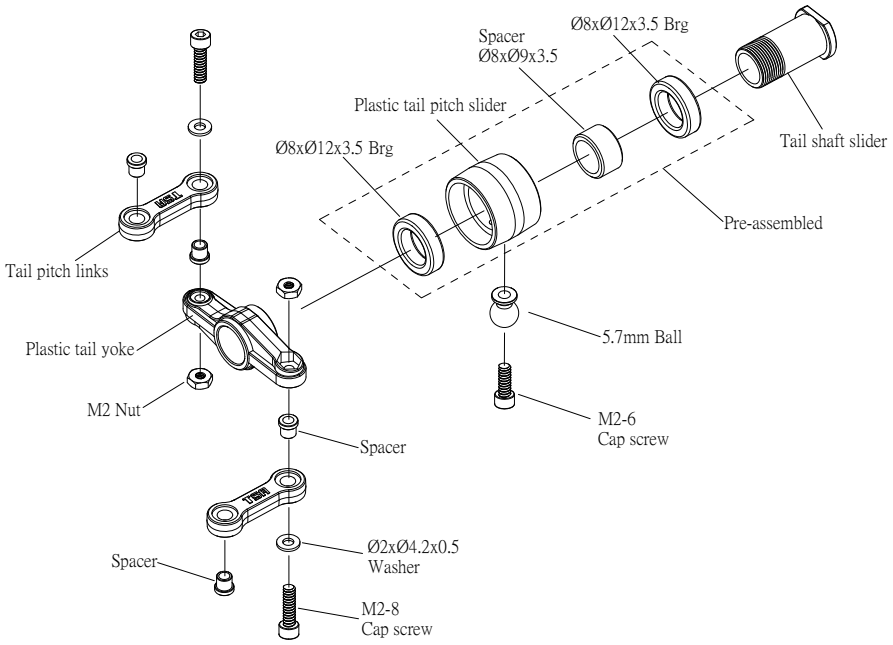

20 Tail Gearbox Assembly-3

T-018-01

Please apply loctite when locking all metal screws .

M2-8 Cap screw	1
M3-20 Bind screw	1
5.7mm Ball	1
M2 Nut	1
M3 Nylon nut	1
Spacer Ø3xØ5x4.5	1
Spacer Ø3xØ4.5x3	1
Ø3xØ7x3 Brg	2

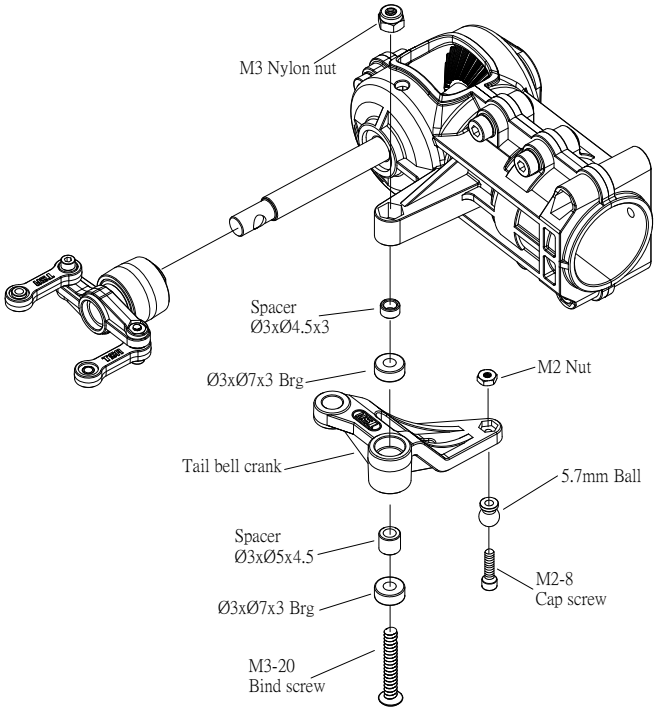

21 Tail Gearbox Assembly-4

T-016-06

Please apply loctite when locking all metal screws .

M3-19-6 Cap screw	2
M3 Nylon nut	2
M4 Nylon nut	2
Ø5xØ10x4 Thrust bearing	2
Ø6xØ12x4 Brg	2

Caution

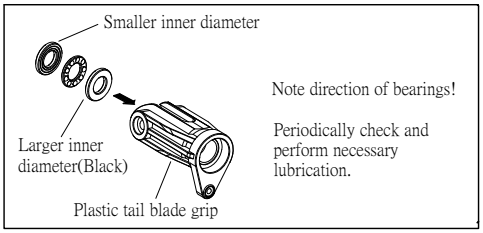

Note direction of bearings!

Periodically check and perform necessary lubrication.

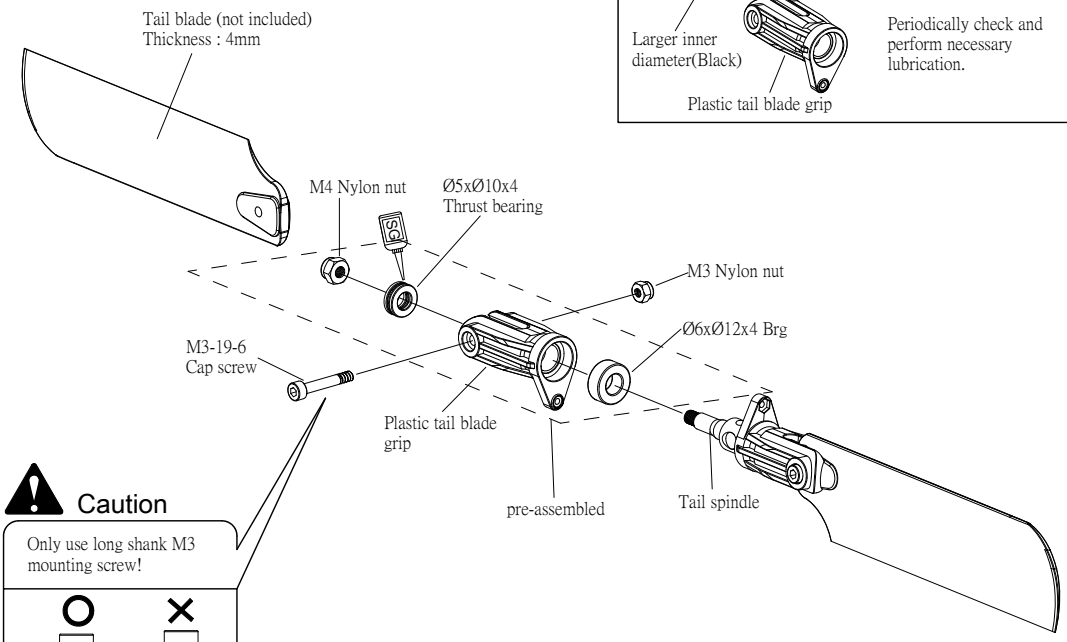

Caution

Only use long shank M3 mounting screw!

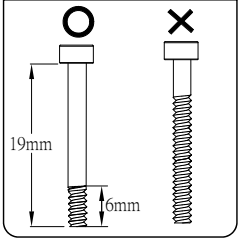

Caution

Fasten the tail blade to permit only slight movement .
Note the direction of the tail blade and the tail blade grip .

22 Tail Gearbox Assembly-5

T-016-06
T-017-00

Please apply loctite when locking all metal screws .

M4-4 SS	1
M2-8 Cap screw	2
Ø2xØ4.2x0.5 Washer	2
M2 Nut	2

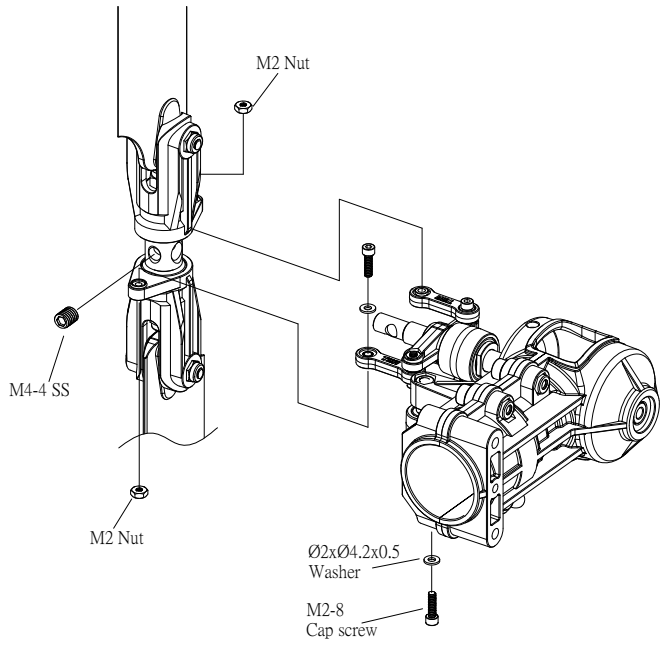

Caution

Use the M4-4SS screw to fasten the tail shaft and spindle. Ensure grub screws are seated into receiver grooves.

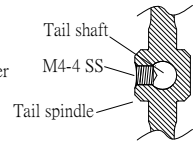

23 Tail Gearbox Assembly-6

T-026-00
T-027-02
T-028-20

Please apply loctite when locking all metal screws .

M2-8 Cap screw	4
M3-8 PH screw	2
M3-10 Cap screw	1
M2 Nut	4
M3 Nylon nut	1
Ø8xØ14x4 Brg	2

Torque tube bearing location :

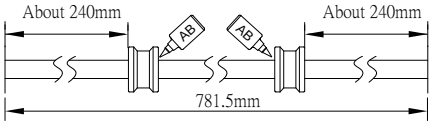

Apply AB glue to shaft then slide bearing overtop and allow to dry.

Assembly Tip

Apply oil to tail boom bearing carrier and inside tail boom for easy T/T installation.

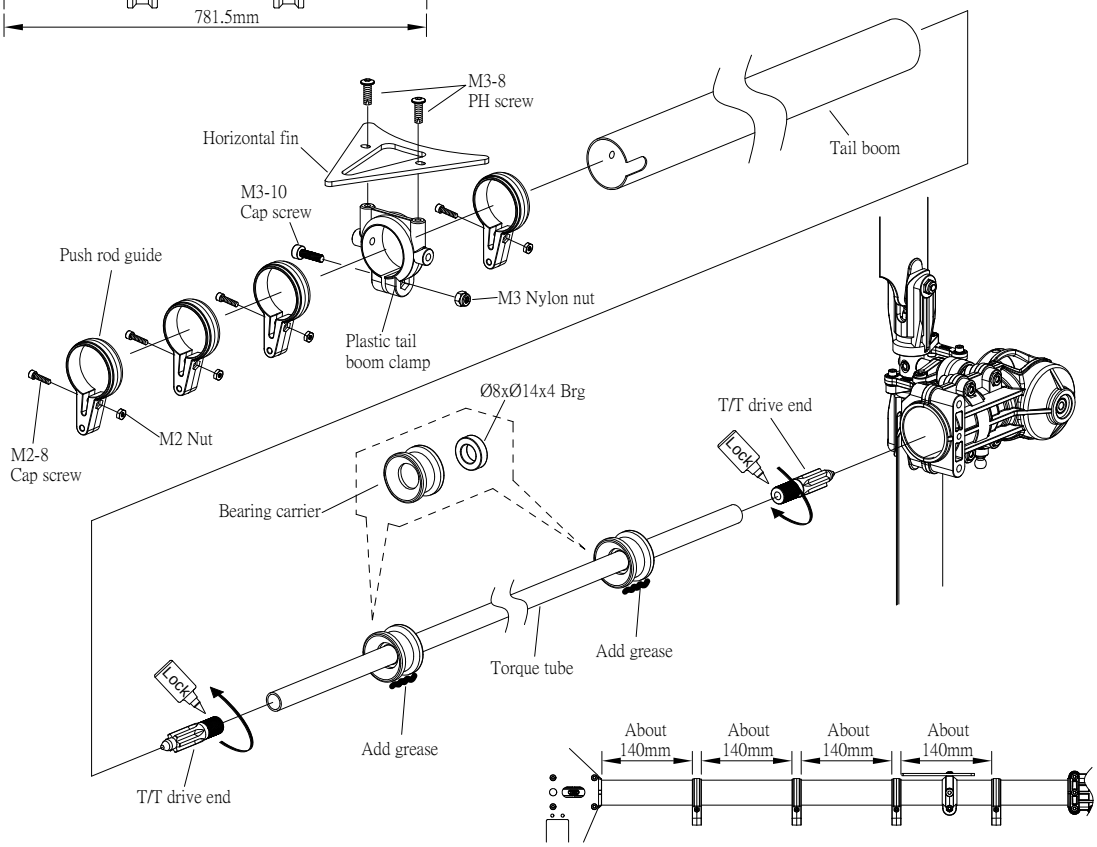

24 Tail Boom Support Assembly

T-002-06
T-016-06
T-026-00
T-027-02
T-028-20

Please apply loctite when locking all metal screws .

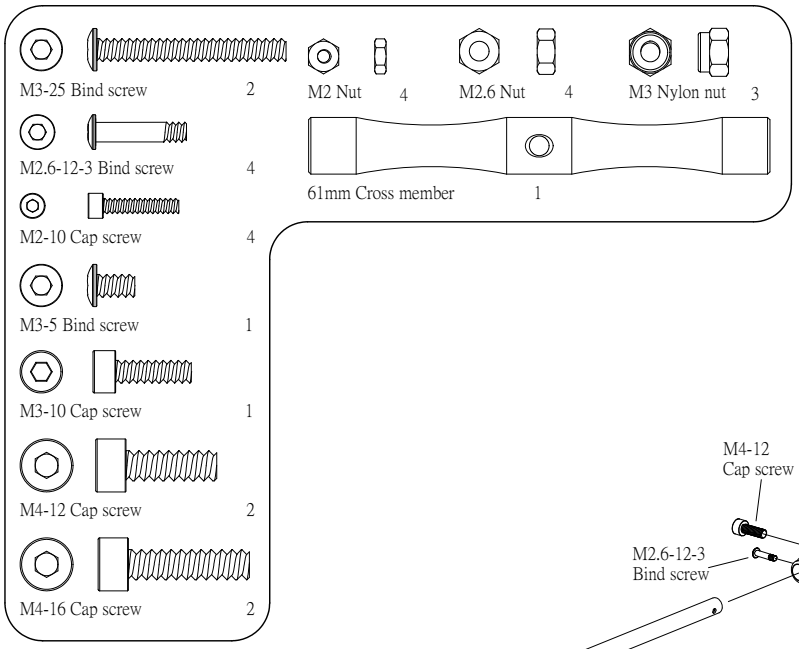

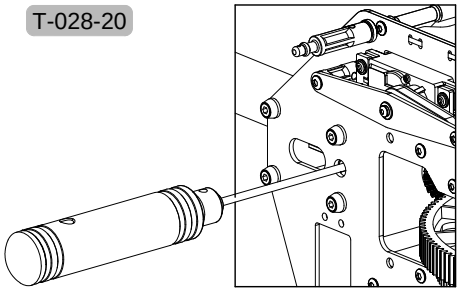

After inserting the tail boom tighten the previously installed retaining screw.

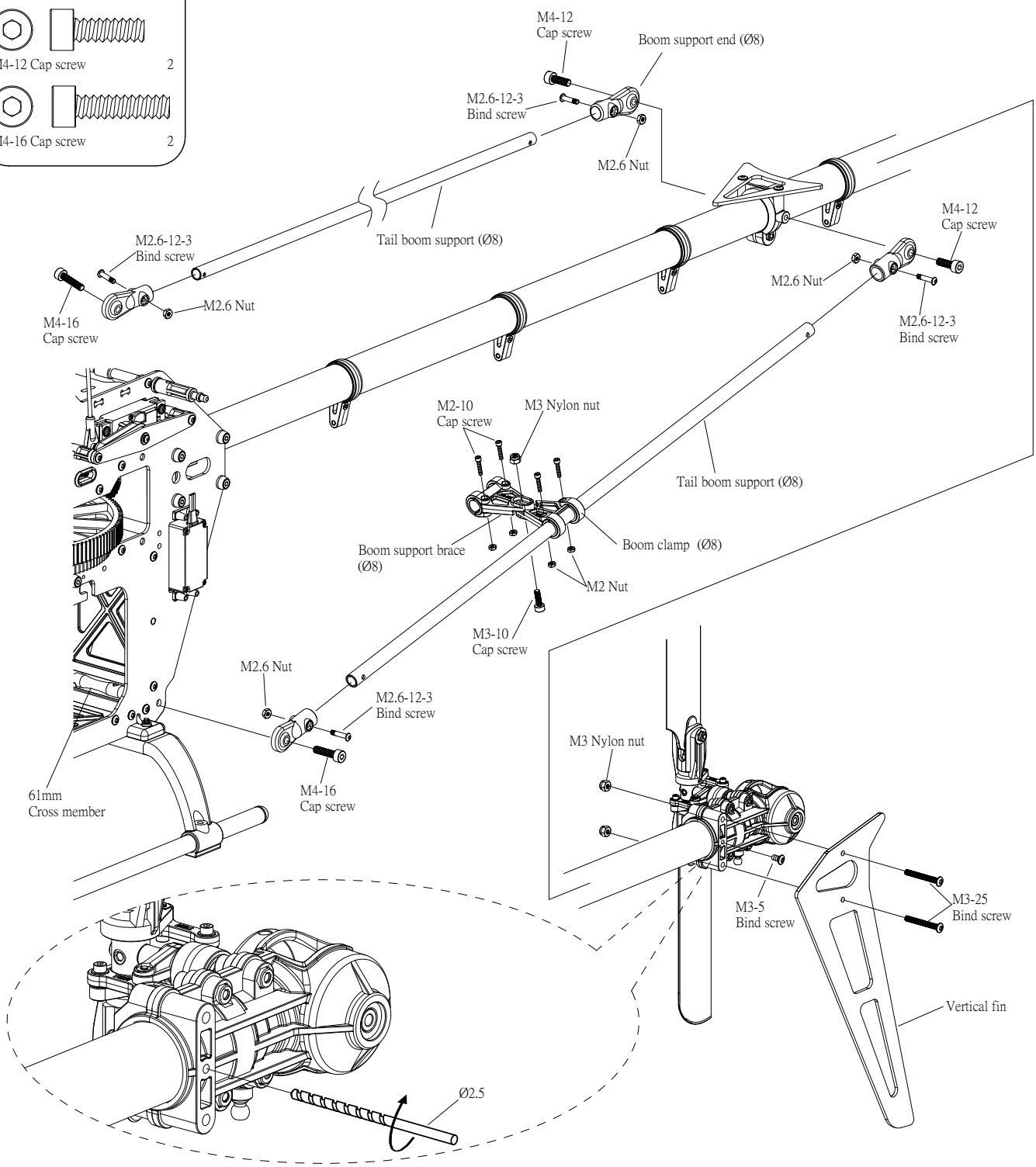

25 Rotor Head Linkage Assembly

T-016-06

Please apply loctite when locking all metal screws .

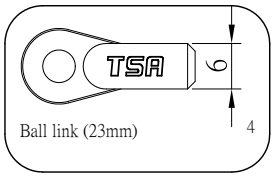

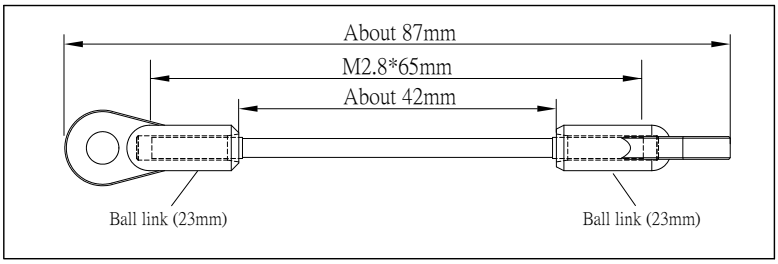

Caution

Measure the pitch angle after assembly of the blades, and then make the adjustment .

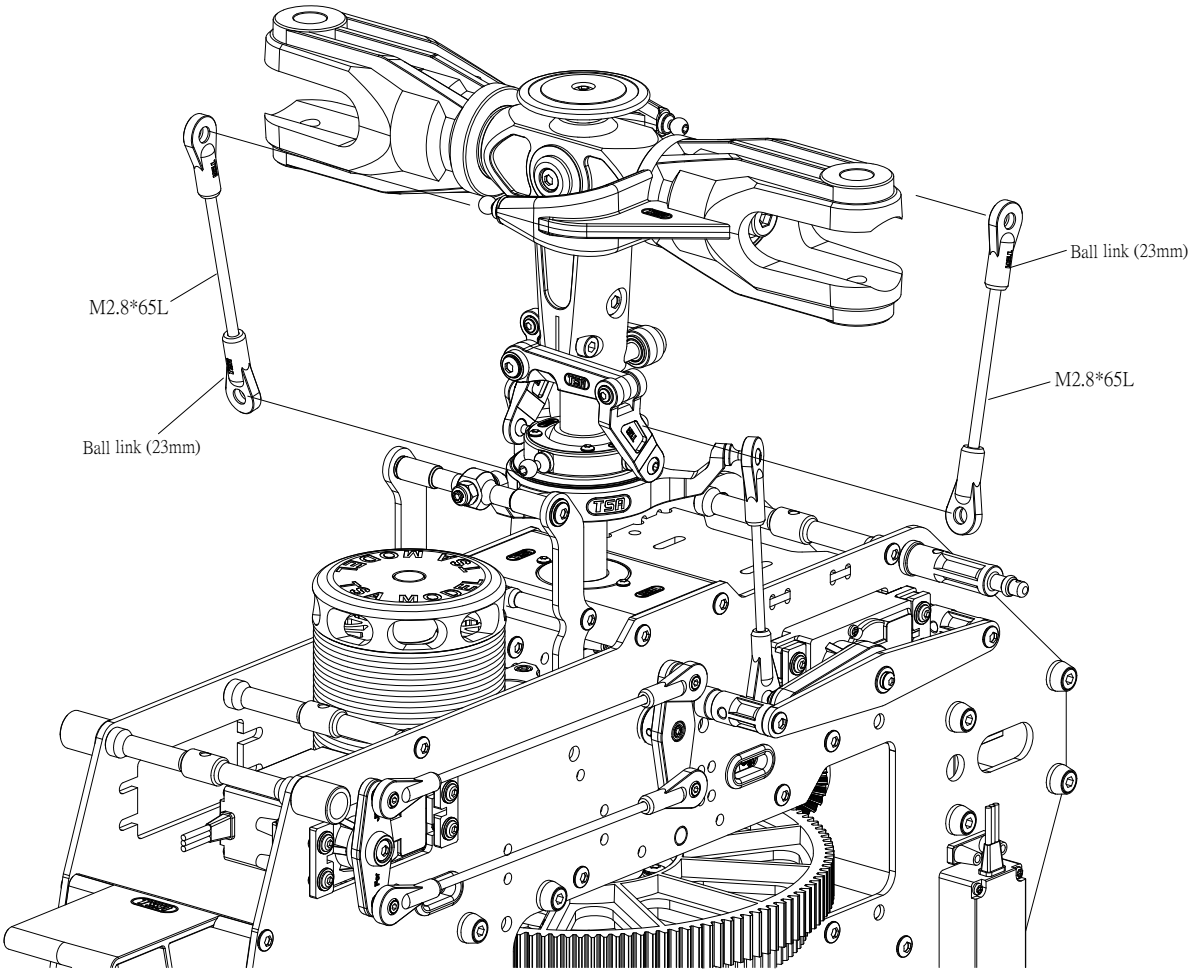

26 Rudder Linkage Assembly

T-024-01
T-027-02
T-028-20

Please apply loctite when locking all metal screws .

M2-8 Cap screw	1
5.7mm Ball	1
M2 Nut	1

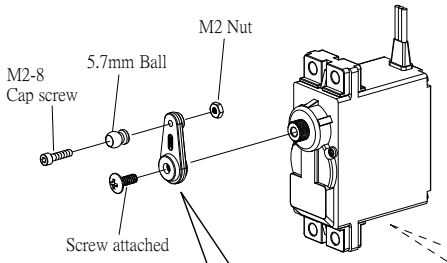

Futaba x 1 JR x 1

Both JR and Futaba servo horns are provided. Please use the appropriate set for your application.

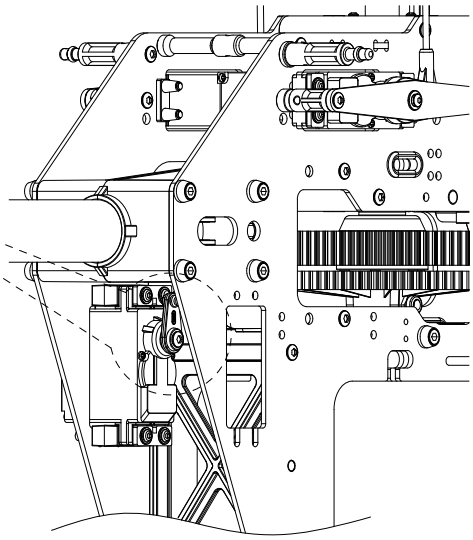

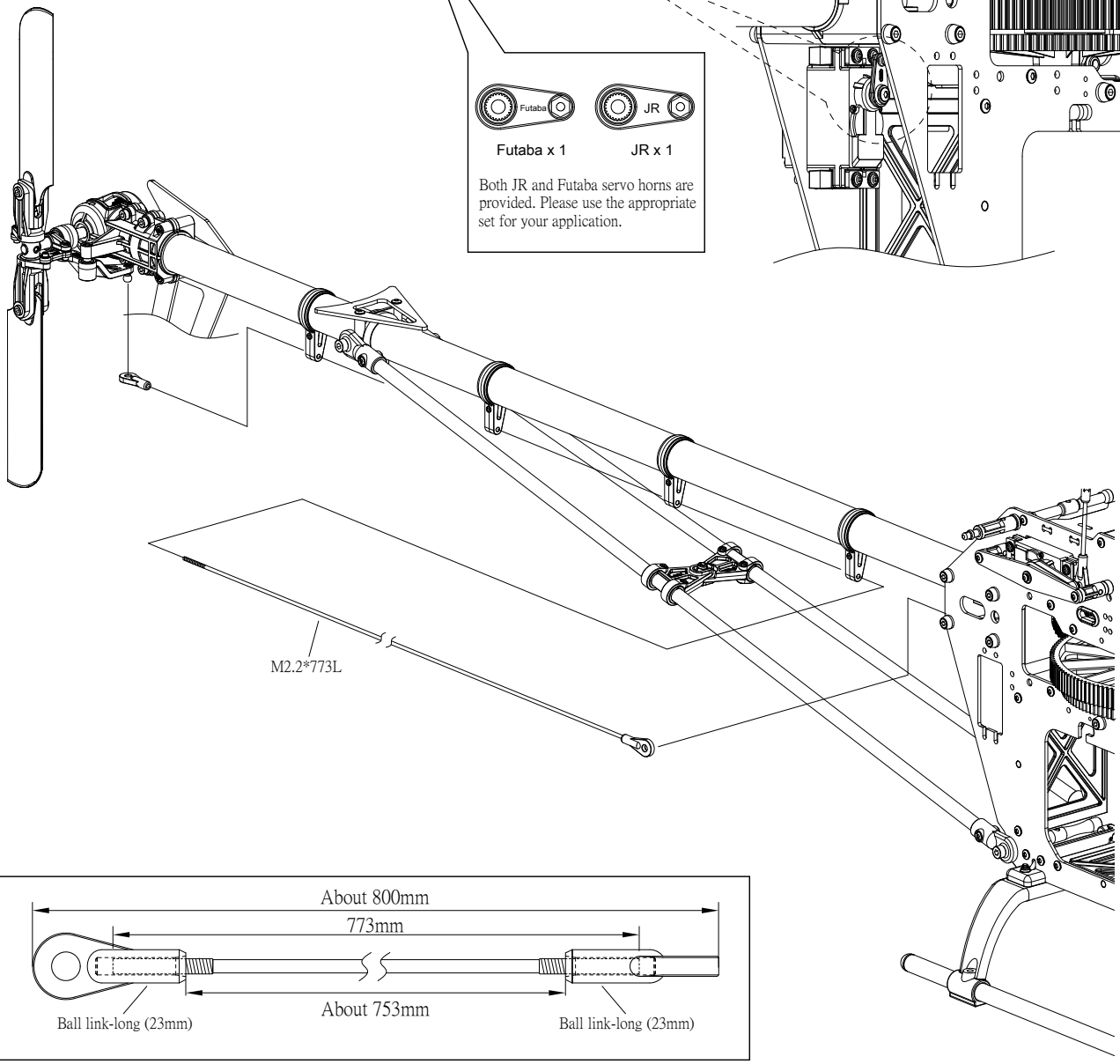

Note the orientation of the helicopter

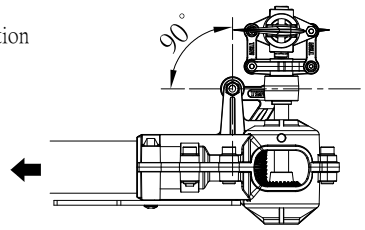

During initial setup of the lever, adjust the tail blade as shown (left). Setup is different among gyro manufacturers, so consult manual before test flying.

27 Main Blade Assembly

T-016-06

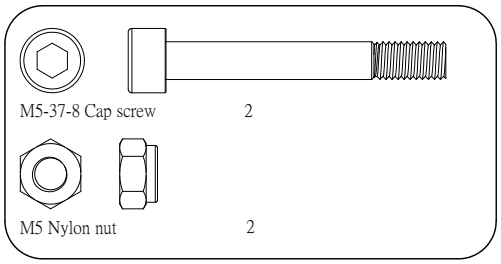

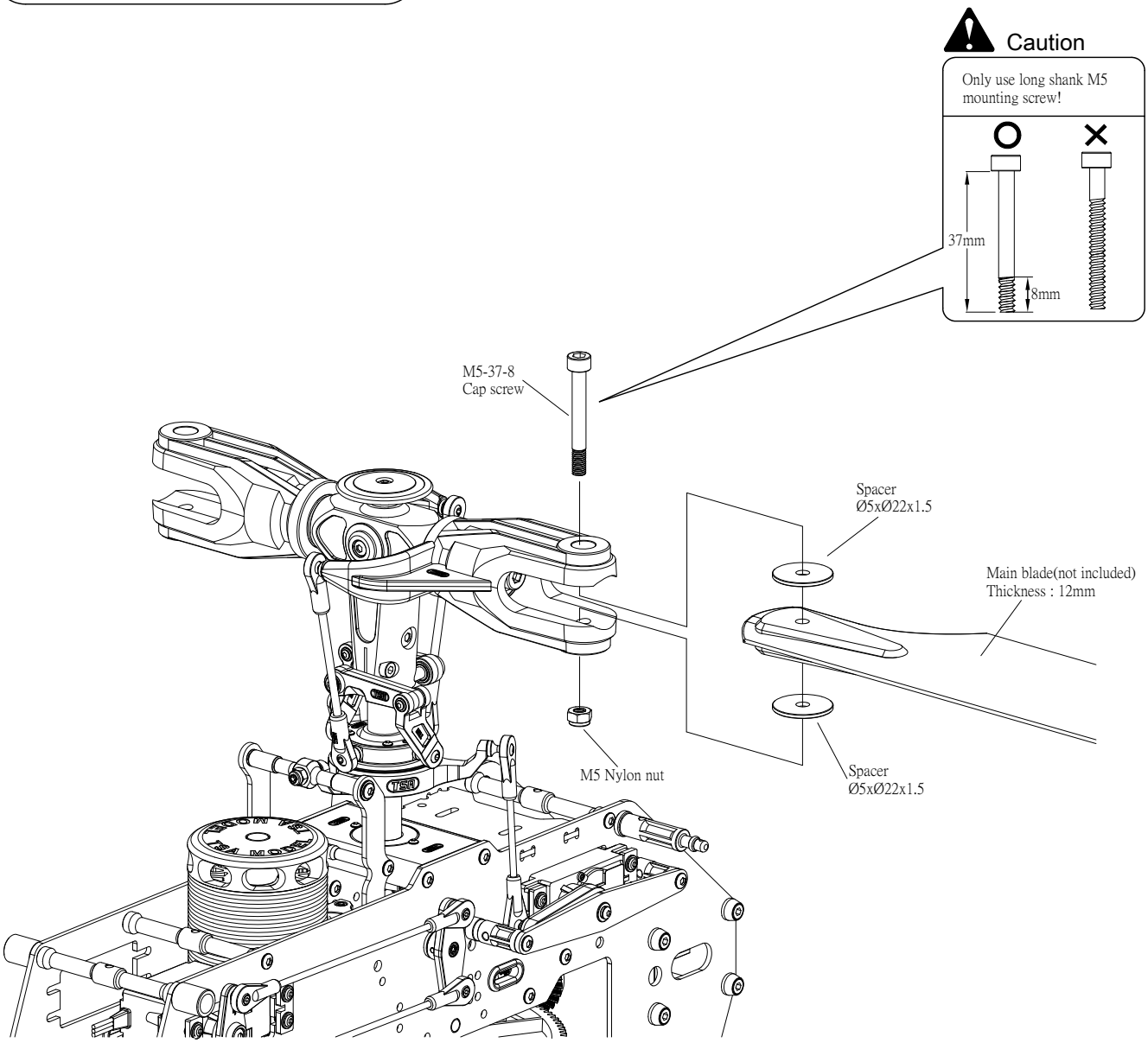

28 Receiver and Gyro Assembly

T-024-01

For JR

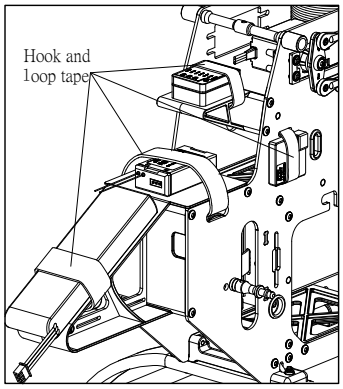

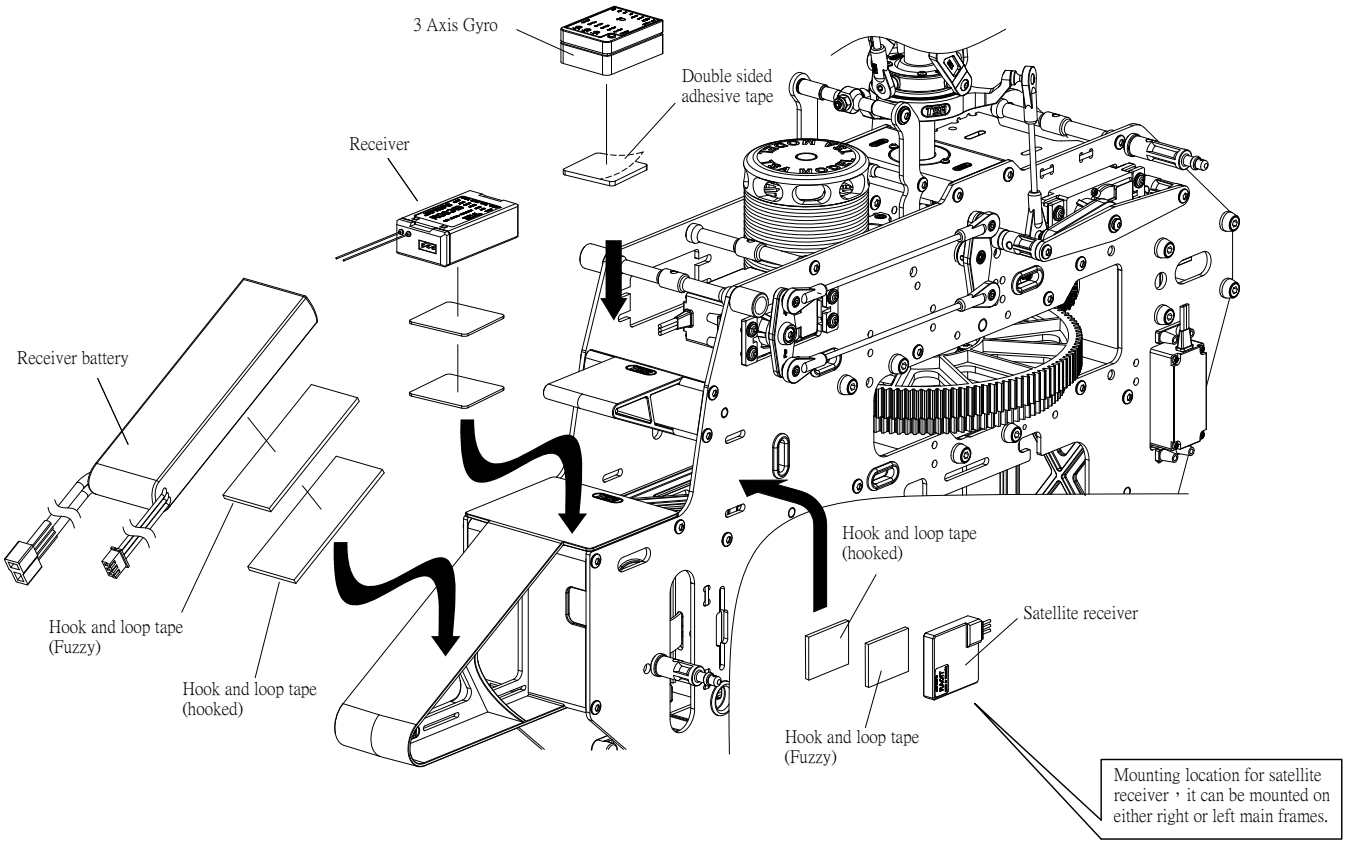

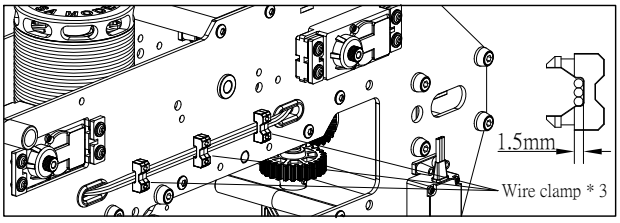

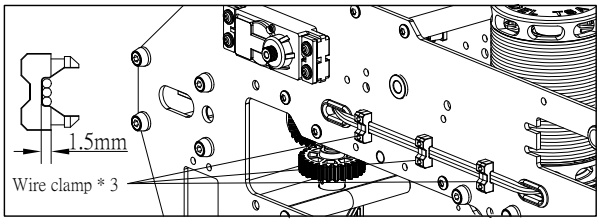

29 Electrical Control System Wiring Diagram

JR / 7CH receiver wiring

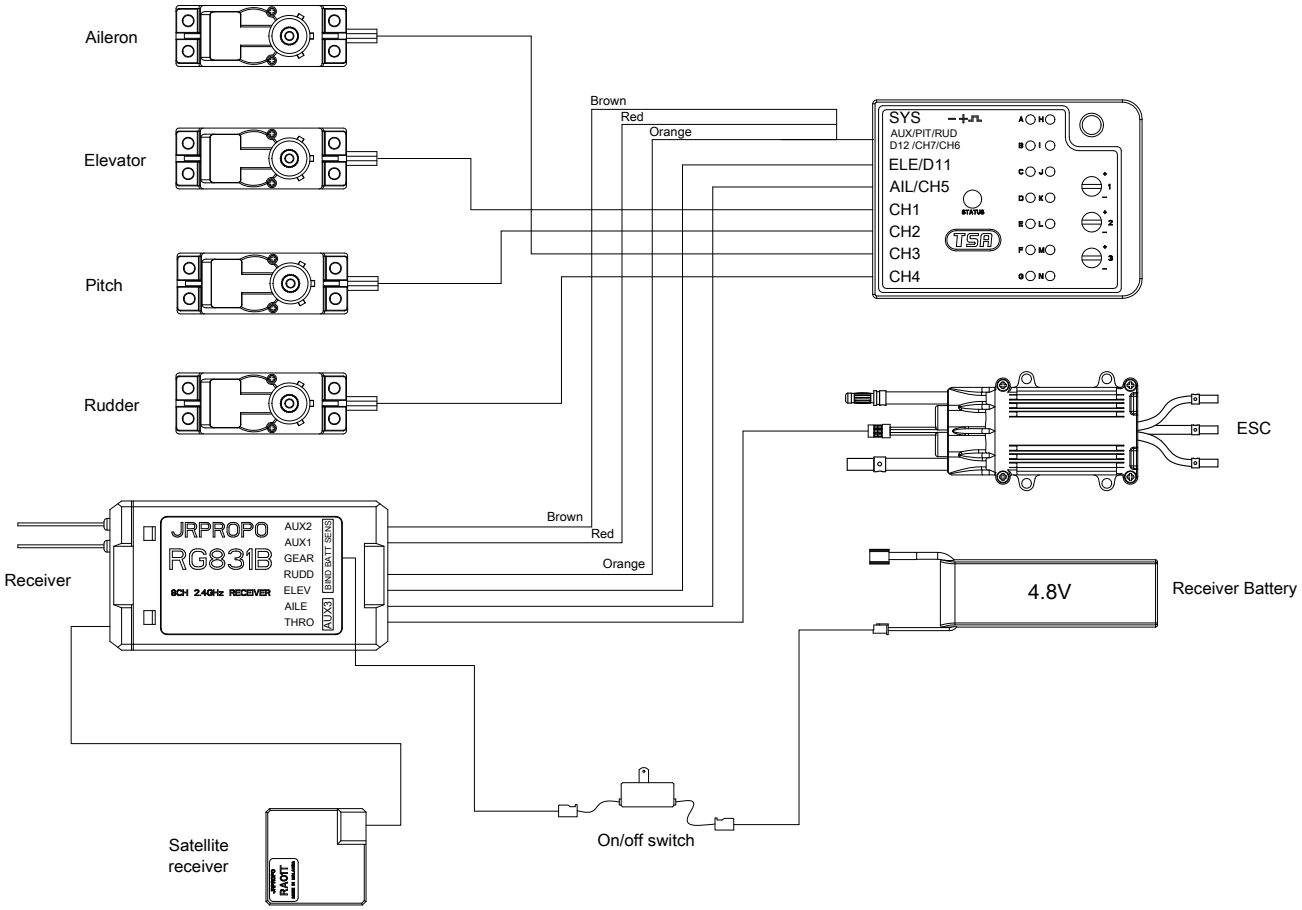

30 Battery Assembly

T-029-00

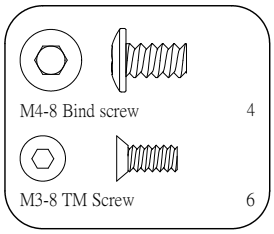

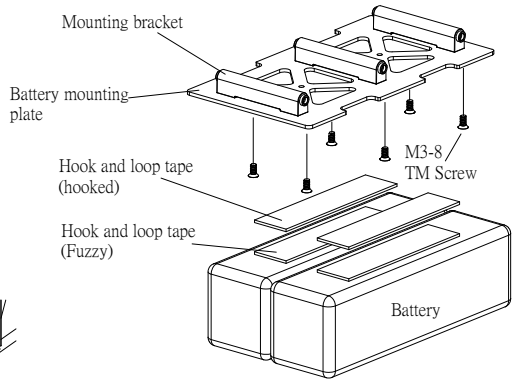

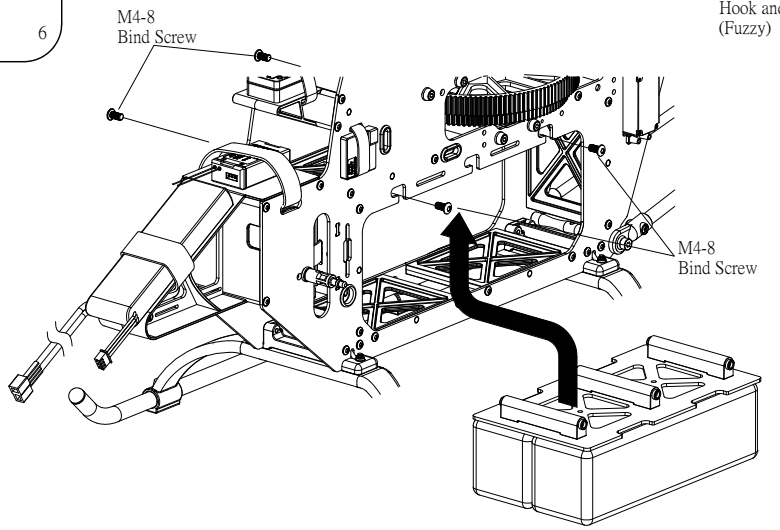

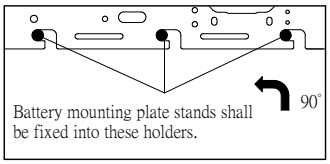

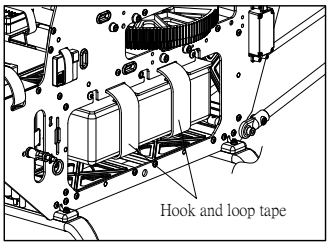

1: Adhere double sided tape to the back side of the battery, and then taped on the battery mounting plate, make sure the battery is fixed in the center of the plate.
2: Use hook and loop tape to enhance the fixing between battery and fuseage, so that to avoid battery lose resulting from vibrate of fuselage while flying.

Wiring illustration

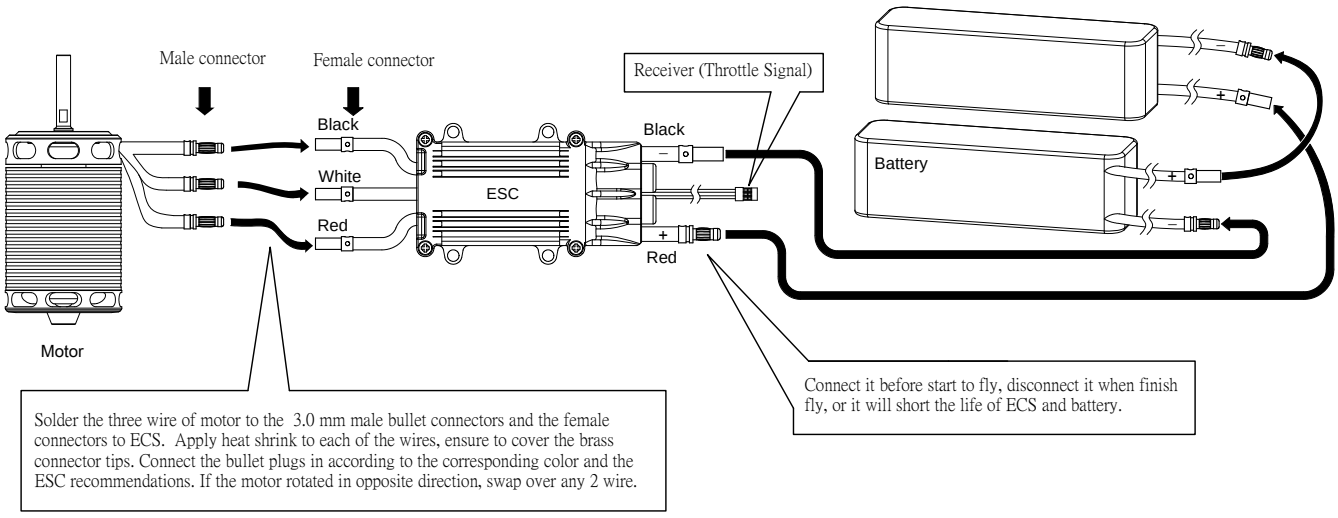

THE CAUTIONS FOR MOTOR

1: Please do not disassembly the motor unless recommended by the manufacturer for bearing replacement only. Permanent damage may occur otherwise.
2: The use of multiple batters alternating between cooler packs is recommended. Also allow batterys to cool before charging. Please allow sufficient time for the motor and ESC to cool down after flying. As back to back flights may shorten the life spand.

31 Canopy Assembly

T-005-00

Optional custom designed canopys are available. Please check website for availability.

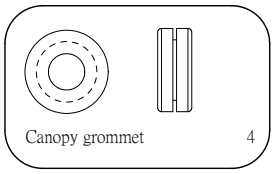

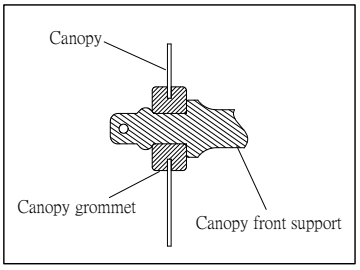

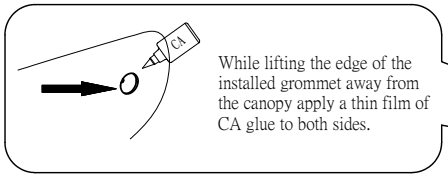

While lifting the edge of the installed grommet away from the canopy apply a thin film of CA glue to both sides.

Canopy grommet

Canopy grommet

Canopy grommet

Canopy grommet

Flybarless gyro setup-3 Axis gyros

Caution

Pleasa refer to the Flybarless gyro instruction manual for setting up the cyclic and tail servo along with the rotor head. This will be specific for each system.

Main blade adjustment

Caution

Precaution during initial setup is for the safety of yourself and others, so please make sure the heli is flying at least 10m away from any person.

1. Increase pitch slowly until the helicopter comes to a stable hover. Note any seperation in the rotor blades.

2. Observe the blade tracking:
   If main blades are in the same track, then no adjustment required.However,
   If one blade appears higher than the another blade, then adjustments must be made.

3. Adjust pitch rod tracking:
   A. Main blade is higher → reduce length of linkage rod
   B. Main blade is lower → add the length of linkage rod

Caution

Improper tracking will result in vibration, Adjust track until both blades are tracking in the same plane.

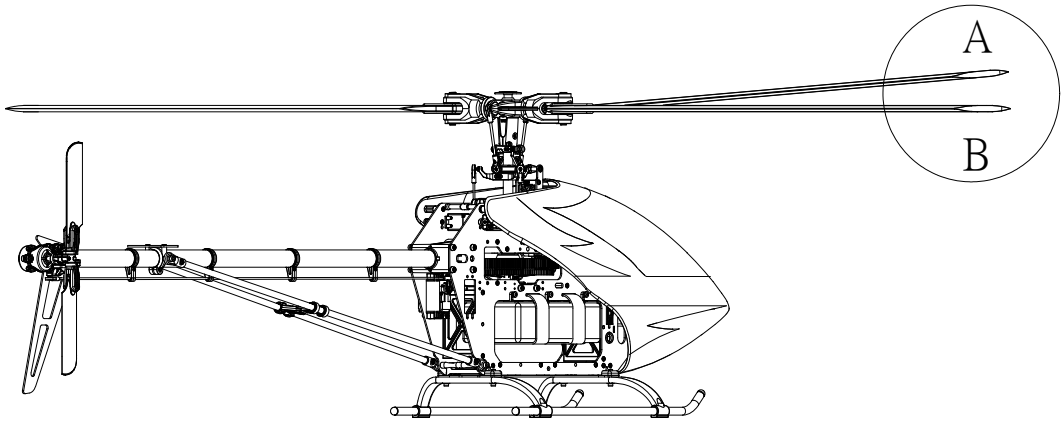

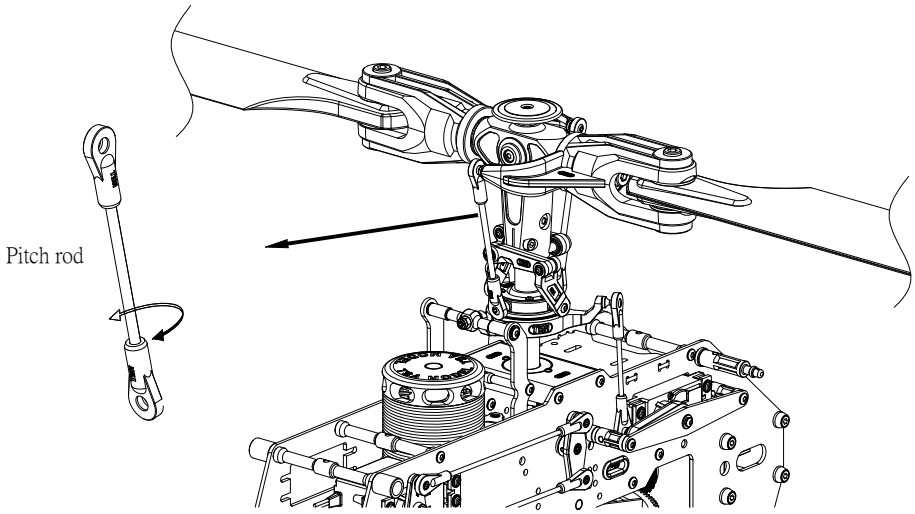

Explanation diagram of operating mode

Caution Beginners should know the designated operating mode of TSA 700E-3D before operating to avoid accidents

(Mode 1)

Throttle / Pitch

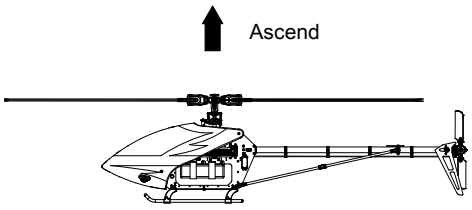

Pushing the pitch control upward will cause the unit to ascend.

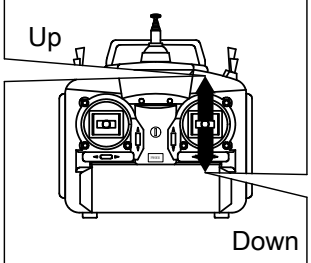

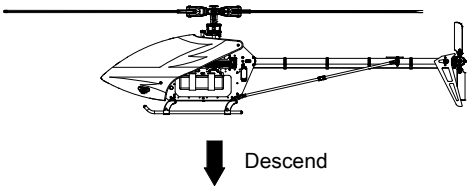

Push the pitch control down, then the unit will descend.

Elevator

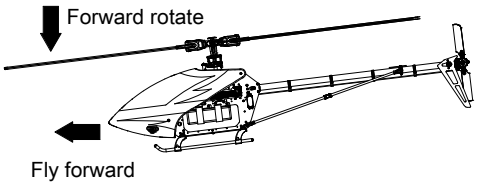

Pushing the elevator control up, then the unit will go forward.

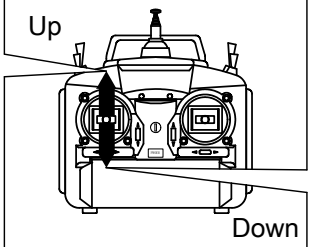

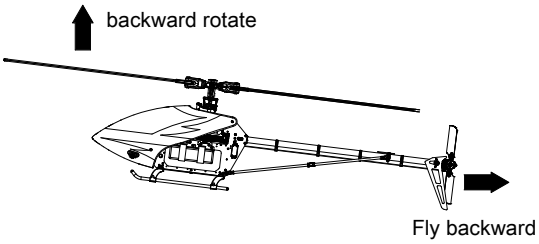

Push the elevator control down, then the unit will go backward.

Aileron

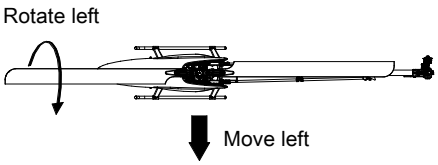

Push the aileron control left, the unit will move to the left.

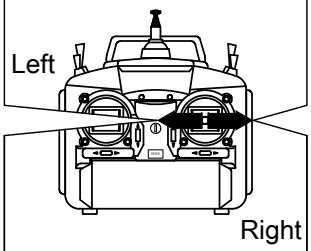

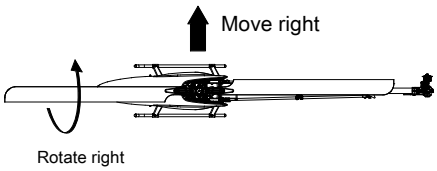

Push the aileron control right, then the unit will move to the right.

Rudder

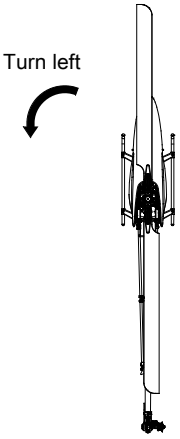

Push the rudder control to the left , the body and nose of unit will rotate to the left.

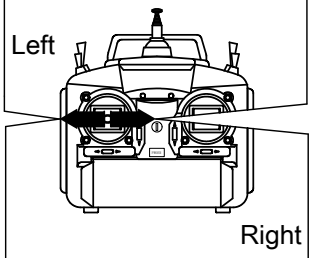

Push the rudder control to the right, the body and nose of unit will rotate to the right .

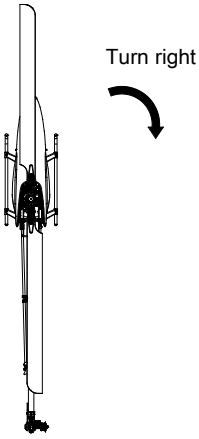

Explanation diagram of operating mode

Caution Beginners should know the designated operating mode of TSA 700E-3D before operating to avoid accidents

(Mode 2)

Throttle / Pitch

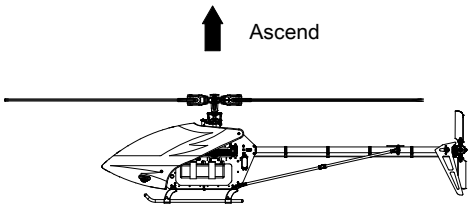

Pushing the pitch control upward will cause the unit to ascend.

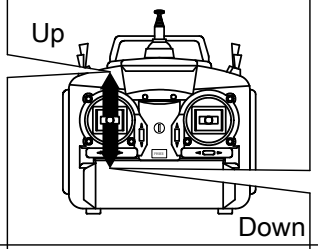

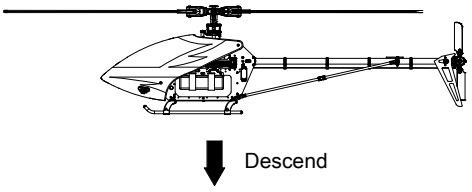

Push the pitch control down, then the unit will descend.

Elevator

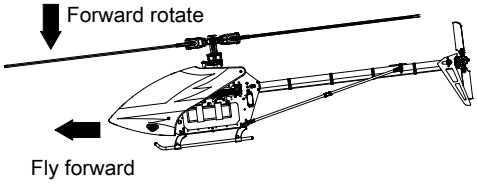

Pushing the elevator control up, then the unit will go forward.

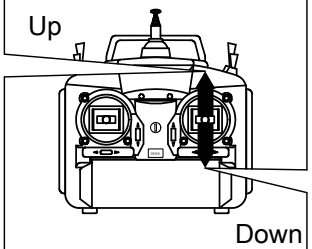

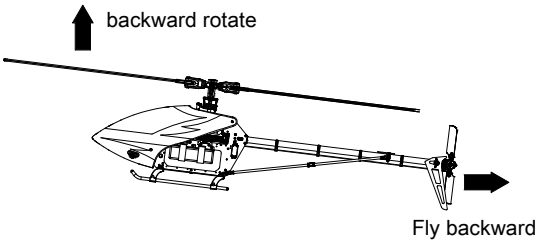

Push the elevator control down, then the unit will go backward.

Aileron

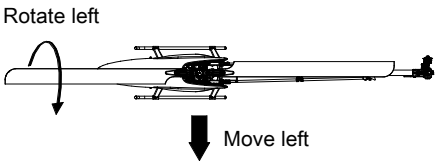

Push the aileron control left, the unit will move to the left.

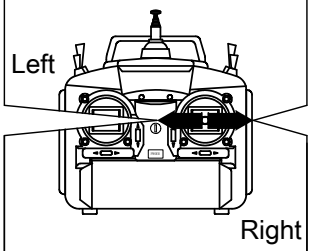

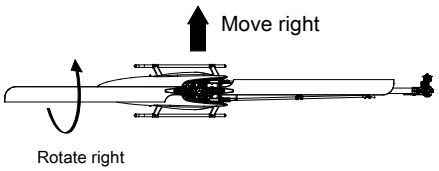

Push the aileron control right, then the unit will move to the right.

Rudder

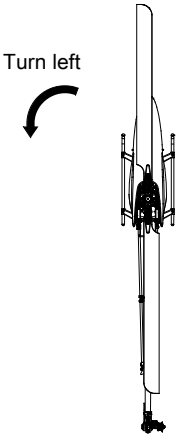

Push the rudder control to the left , the body and nose of unit will rotate to the left.

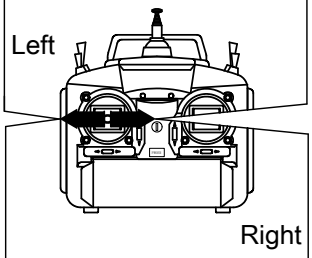

Push the rudder control to the right, the body and nose of unit will rotate to the right .

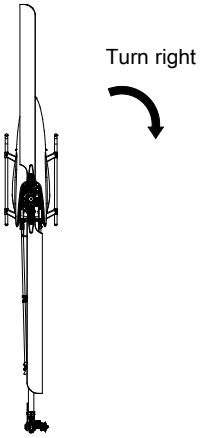

In-flight

The helicopter's main and tail rotors spin at very high speed. Make sure to follow these instructions to ensure a safe and enjoyable flight.

Transporting the unit

When transporting the unit to an airfield, secure it to prevent the unit from tipping over. Avoid causing damage to the components which may adversely effect flight performance and safety.

Check the unit before flight

Check that all of the screws are securely fastened. New unit tends to have loose screws. Make sure to check them all before each flight. Check that the transmitter and receiver batteries are fully charged.

The airfield

Do not fly
1. Near people ,
2. Near buildings ,
3. Near roads, railway tracks, or power lines .

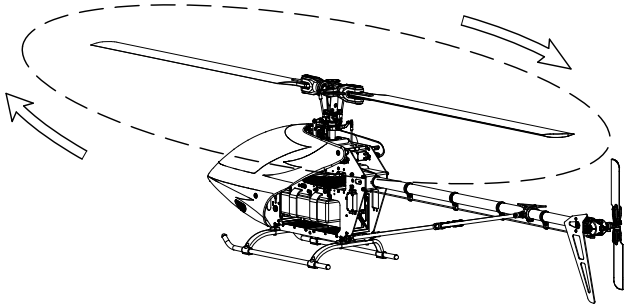

The distance of flight

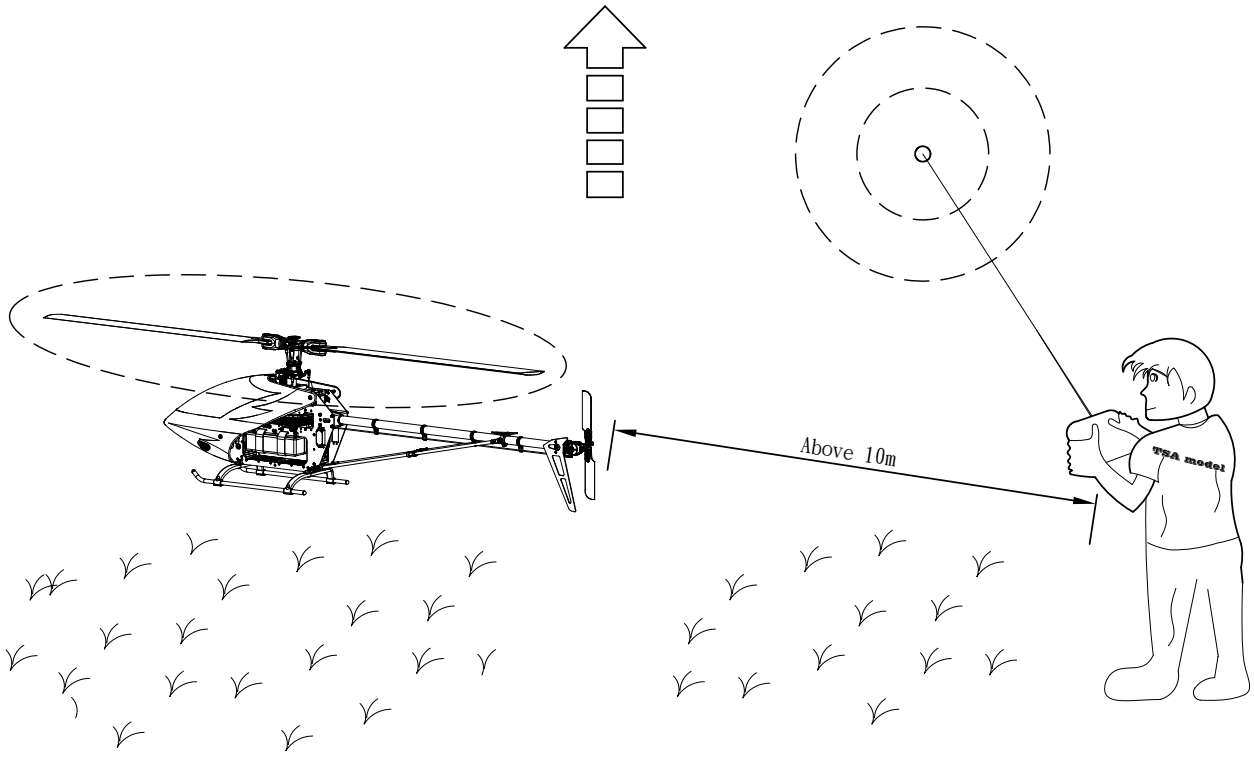

Spare parts

※ Order Number:TPA00127XX (Left)

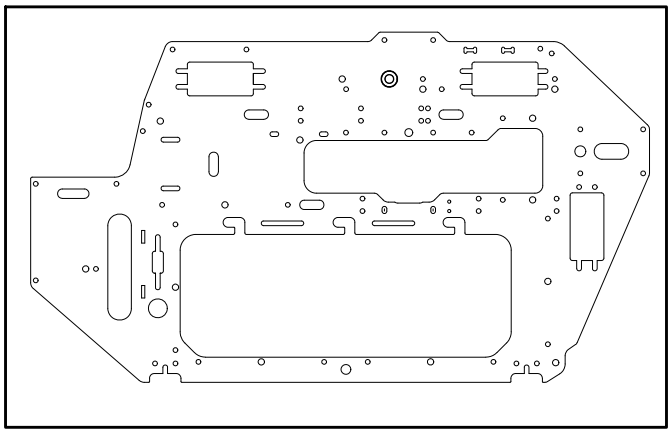

※ Order Number:TPA00128XX (Right)

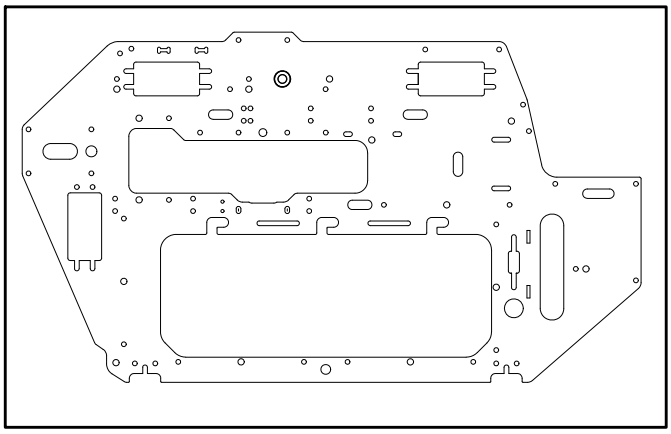

Order Number:TPA06100XX

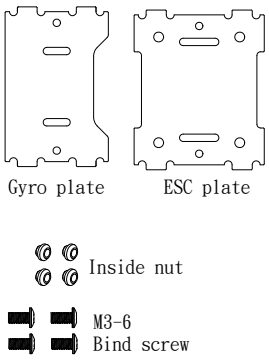

Order Number:TPA00302XX

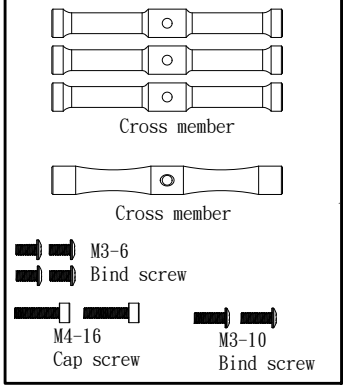

Order Number:TPA05804XX

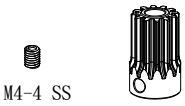

Order Number:TPA05806XX

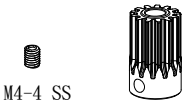

Order Number:TPA0145000

Order Number:TPA00400XX

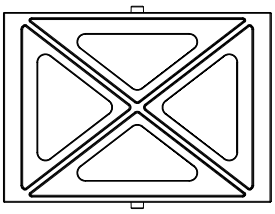

Order Number:TPA00500XX

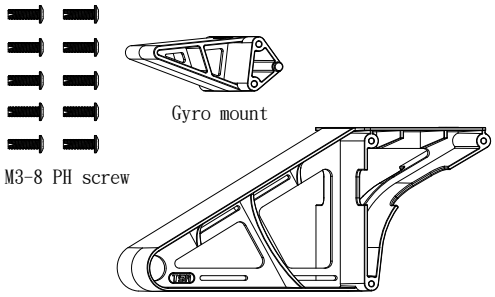

※ Order Number:TPA05900XX

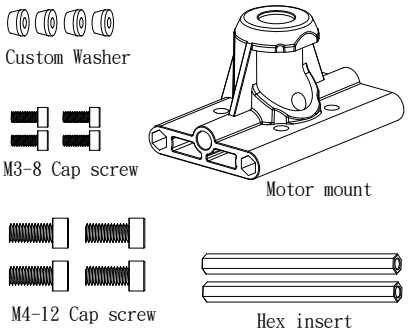

Order Number:TPA01300XX

Order Number: TPA01000XX

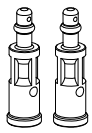

Order Number: TPA01200XX

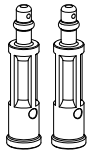

Order Number:TPA01100XX

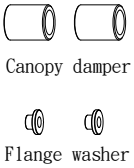

※ Order Number:TPA00900XX

※ Order Number:TPA00700XX

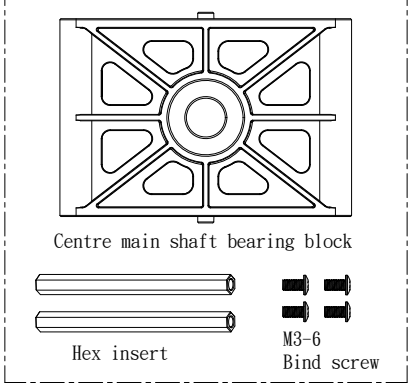

※ Order Number:TPA00800XX

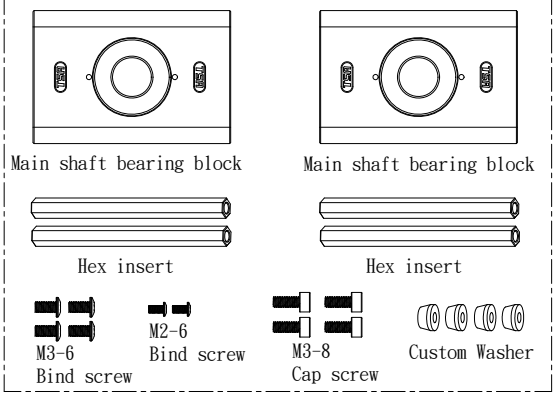

※ Parts with this symbol have been assembled by the bearing factory.

Spare parts

Order Number:TPA01601XX

Order Number:TPA01400XX

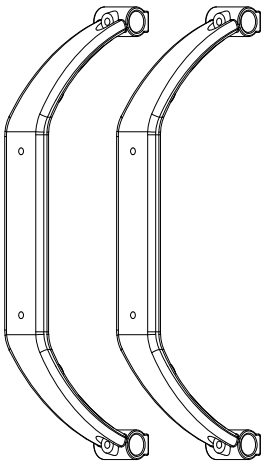

Landing skid

M4-4 SS

Order Number: TPA01501XX

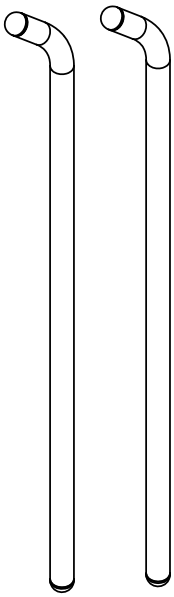

Landing skid tube

Order Number:TPA0043002

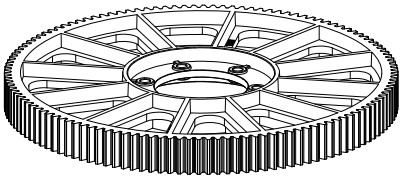

Plastic main gear
(126T)

Order Number:TPA03600XX

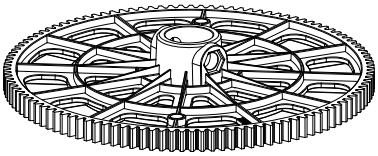

Plastic tail drive gear
(113T)

Spacer
(Ø4xØ5.5x3.25mm)

Order Number: TPA0121003

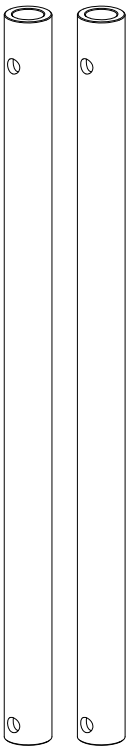

Main shaft

Order Number:TPA01900XX

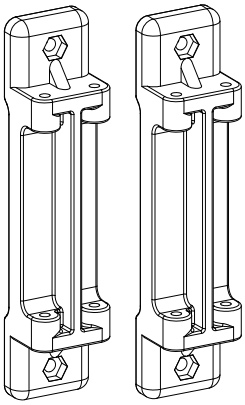

Plastic Skid Mount

M3-12 PH screw

M3-18 Cap screw

M3 Nylon nut

Ø3xØ8x0.8 Washer

Order Number:TPA03800XX

M4 Nylon nut

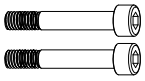

M4-27-6
Cap screw

※ Order Number:TPA03500XX

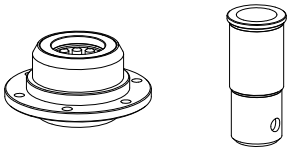

M3-8 Bind
screw

Order Number: TPA0122010

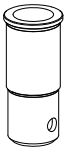

Auto-rotation
drive shaft

Order Number:TPA02800XX

Order Number:TPA0340000

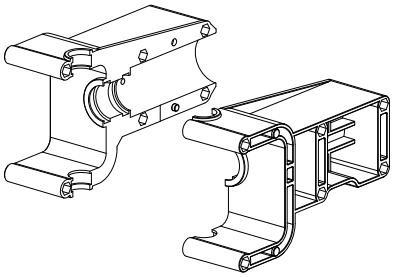

Plastic tail
boom clamp

Order Number: TPA02700XX

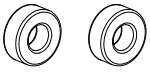

Ø6xØ13x5
Bearing

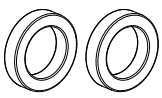

Ø12xØ18x4
Bearing

Order Number:TPA02500XX

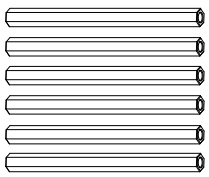

Hex insert

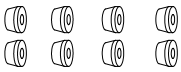

Stator

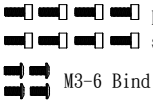

M3-8 Cap
screw

M3-6 Bind screw

M3-8 Bind screw

Order Number:TPA02600XX

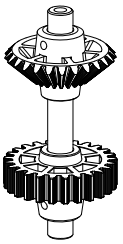

Locating pin
(Ø2x12mm)

M3-5 SS

Bevel gear

Spare parts

※ Order Number:TPA04610XX

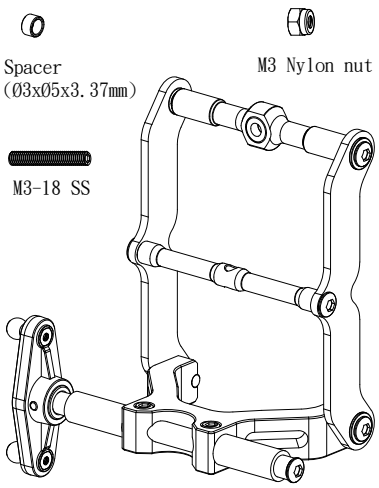

Order Number:TPA04002XX

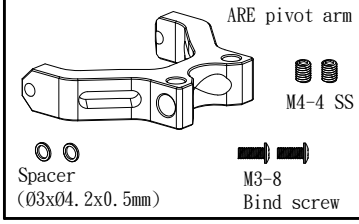

Order Number:TPA04100XX

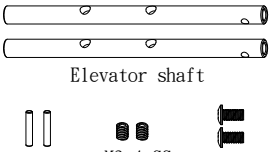

Order Number:
TPA04200XX

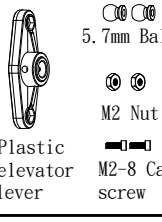

Order Number:
TPA04302XX

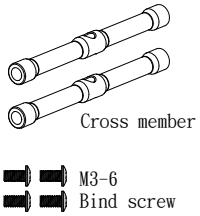

※ Order Number:
TPA04409XX

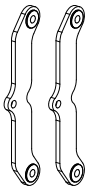

※ Order Number:TPA04502XX

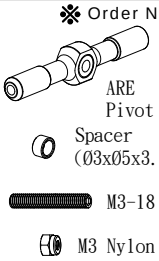

Order Number:
TPA0210001

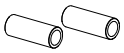

※ Order Number:TPA20100XX

Order Number:TPA06000XX

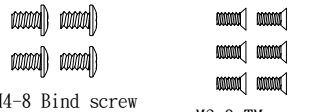

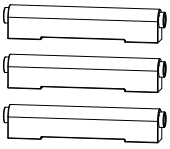

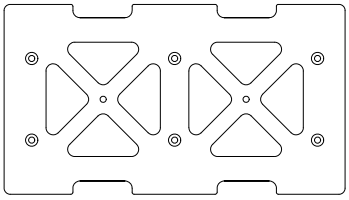

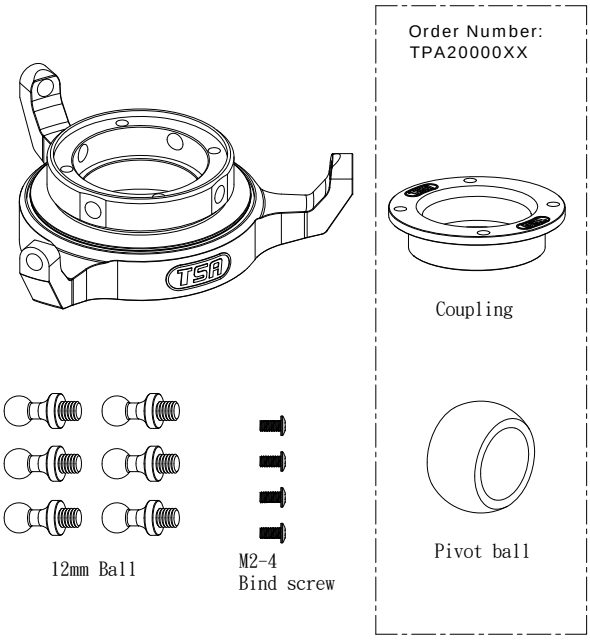

Order Number:
TPA20200XX

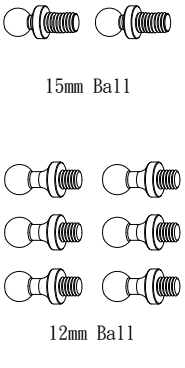

※ Order Number:TPA20400XX

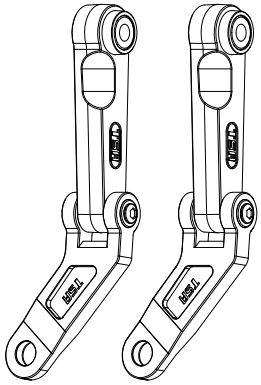

※ Order Number:TPA20300XX

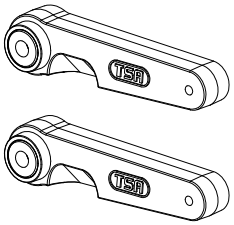

Order Number:TPA0306000

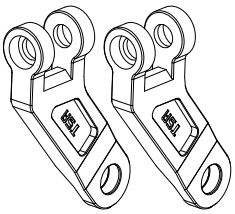

Order Number:TPAB00100X

Order Number:TPA04700XX

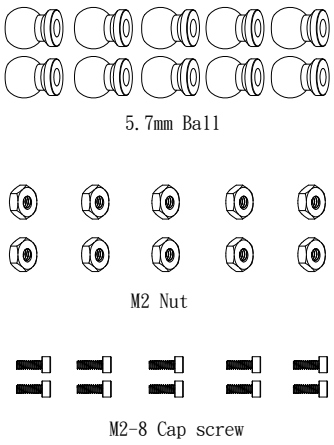

Spare parts

Order Number:TPA20901XX

Order Number:TPA20801XX

Metal
Head block

M4-5 Bind screw

M3-15 Cap screw

Spacer(Ø3*Ø4.5*6.2mm)

M3-20 Bind screw

Order Number:TPA20601XX

Teeter hub

Acetyl bearing

Custom washer

M3-6 Bind screw

Order Number:TPA0201001

Damper shim
(Ø10*Ø15.5*1mm)

Order Number:TPA0302001

Feathering shaft guide

Order Number:TPA0141001

Damper50°(black)

Order Number:TPA20700XX

Head button

M3-12 Bind screw

Order Number:TPA20501XX

Spindle(Ø10*111.2mm)

M6-12
Cap screw

Ø6xØ13x2
Washer

※ Order Number:TPA21202XX

Blade grip

Spacer(Ø5*Ø22*1.5mm)

15mm Ball

M5
Nylon nut

M5-37-8 Cap screw

Order Number:TPA21001XX

M5 Nylon nut

M5-37-8 Cap screw

Order Number:TPA21301XX

Rod
(M2.75*65mm)

Ball link
(23mm)

※ Order Number:TPA42000XX

M3 Nylon nut

M3-19-6 Cap screw

M4-4 SS

Order Number:TPA41800XX

M3 Nylon nut

M3-19-6 Cap screw

※ Order Number:TPA41900XX

Tail blade grip

Order Number:TPA41700XX

Tail spindle

M4-4 SS

M4 Nylon nut

Spare parts

※ Order Number:TPA42100XX

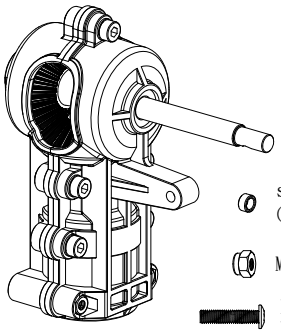

spacer (Ø3*Ø4.5*3mm)

M3 Nylon nut

M3-20 Bind screw

Order Number:TPA41300XX

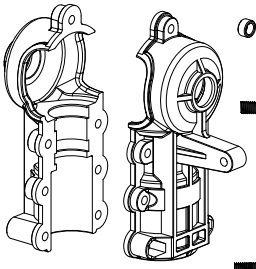

spacer (Ø3*Ø4.5*3mm)

M3-5 Bind screw

M3-20 Bind screw

Tail gearbox clamp

M3-25 Bind screw

M3-12 Cap screw

Ø3xØ6x0.5 Washer

M3 Nylon nut

Order Number: TPA40900XX

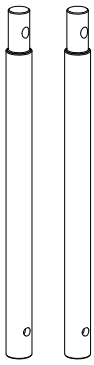

Metal tail output shaft

Locating pin (Ø2x12mm)

M3-5 SS

Order Number: TPA41302XX

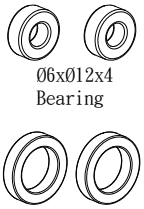

Ø6xØ12x4 Bearing

Ø12xØ18x4 Bearing

Order Number: TPA40800XX

Locking collar

M3-3 SS

Order Number:TPA02300XX

Bevel gear

Bevel gear

Order Number:TPA41000XX

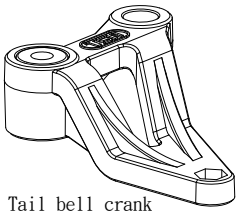

Tail bell crank

5.7mm Ball

M2-8 Cap screw

M2 Nut

Order Number:TPA41600XX

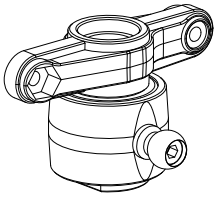

Order Number:TPA41400XX

Tail pitch links

Ø2xØ4.2x0.5 Washer

Spacer

M2-8 Cap screw

Order Number:TPA40000XX

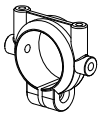

Plastic tail boom clamp

M3 Nylon nut

M3-8 PH screw

M4-12 Cap screw

M3-10 Cap screw

Order Number:TPA42300XX

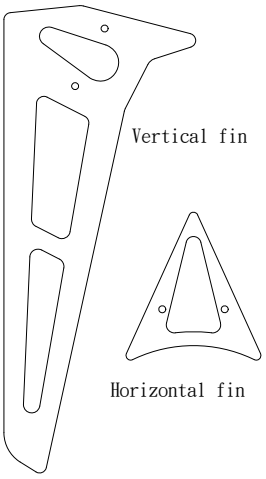

Vertical fin

Horizontal fin

Order Number:TPA04800XX

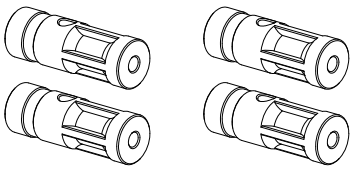

Servo support

M3-8 PH screw

Order Number:TPA04900XX

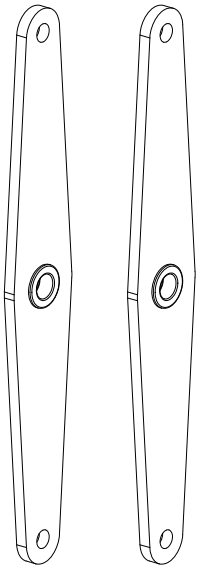

Servo support plate

M2.6-12 Bind screw (Futaba)

M3-12 Bind Screw (JR)

Servo support guide

Order Number:TPA05203XX

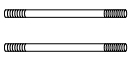

Rod (M2.2*50mm)

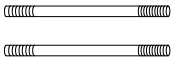

Rod (M2.8*65mm)

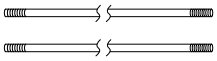

Rod (M2.2*100mm)

Spare parts

Order Number:TPA05500XX

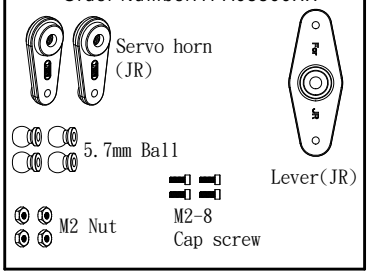

Order Number:TPA05300XX

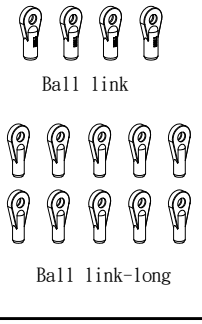

Order Number: TPA05400XX

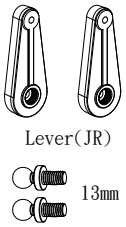

Order Number: TPA05701XX

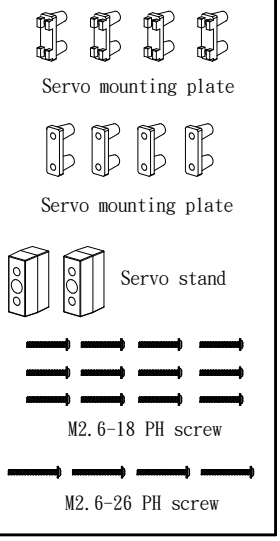

Order Number:TPA05501XX

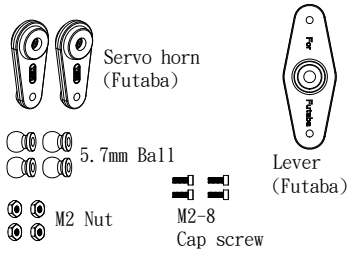

Order Number:TPA06500XX

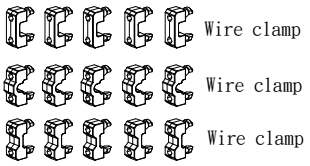

Order Number: TPA05401XX

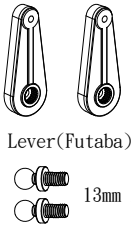

Order Number:TPA40201XX

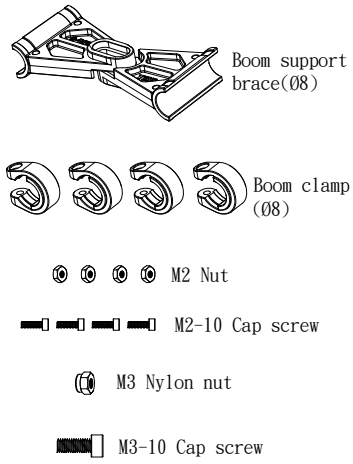

Order Number:TPA40100XX

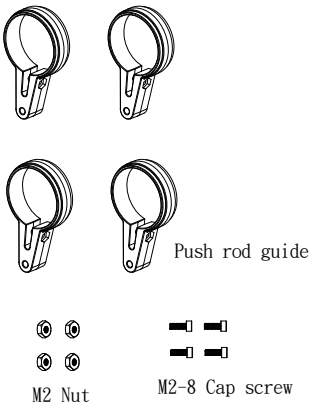

Order Number:TPA0333000

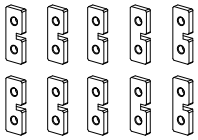

Order Number: TPA0172000

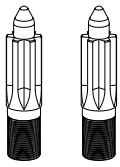

Order Number:TPA40301XX

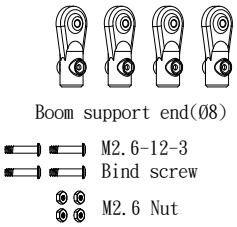

Order Number: TPA40600XX

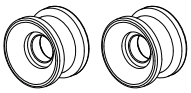

Order Number:TPA40701XX

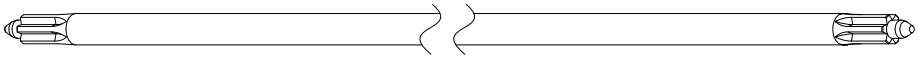

Order Number:TPA90000XX

Order Number:TPA40502XX

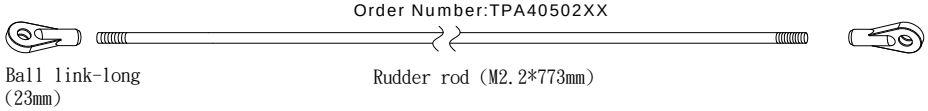

Order Number:TPA60301XX

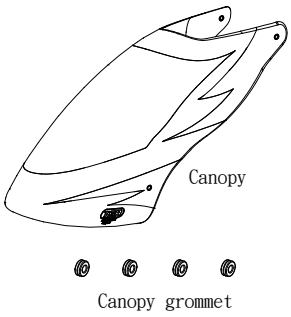

Order Number:TPA40409XX

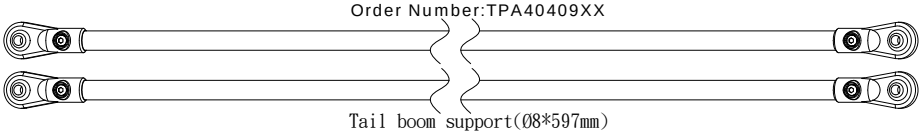

Order Number:TPA0084001

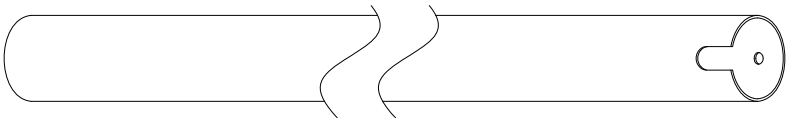

Specifications

- ★ Full length of fuselage ---------- 1373mm
- ★ Full width of fuselage ---------- 215mm
- ★ Height ---------- 410mm
- ★ Flying weight (12s5000mAh approx) ---------- 5260g
- ★ Main rotor diameter ---------- 1580mm
- ★ Tail rotor diameter ---------- 262mm
- ★ Engine class ---------- 4,500~11,000W/500~550KV
- ★ Gear ratio ---------- 9.0/9.69/10.5/11.45:1:4.52
- ★ Main gear ratio ---------- 11T:12T/13T/14T:126T
- ★ Tail gear ratio ---------- 113T:25T
- ★ Main blade (not included) ---------- 680~710mm
- ★ Tail blade (not included) ---------- 90~110mm
- ★ Power battery ---------- 6S Li-Po 4000~5000mAh 2pcs

INFUSION 700E Pro

Customer Support: sales@tsamodel.com

Safety Precautions

Helicopter spinning blades are potential dangerous. Please ensure to maintain a minimum distance of 10m from the aircraft at all times. It is the responsibility of the builder to ensure the aircraft is airworthy and safe to operate in the designated area. On going maintenance is required by the operator to ensure continuous safe use and all damaged parts should be replaced immediately.

Small components are included in the kit, please ensure the kit parts are kept out of children's reach, as they are small enough to swallow.

Use only TSA Model genuine parts, failure to do so could result in damage to both the aircraft and personal in the area. TSA Model takes no responsibility for the operational use of the aircraft.

WARNING
14+
AGES

Caution

Reproduction of the manual and any TSA components are strictly prohibited.

The contents of this manual are subject to change without prior notice.

Every effort has been made to ensure that this manual is complete and correct.

WWW.TSAMODEL.COM