EXPLODED VIEW (1)

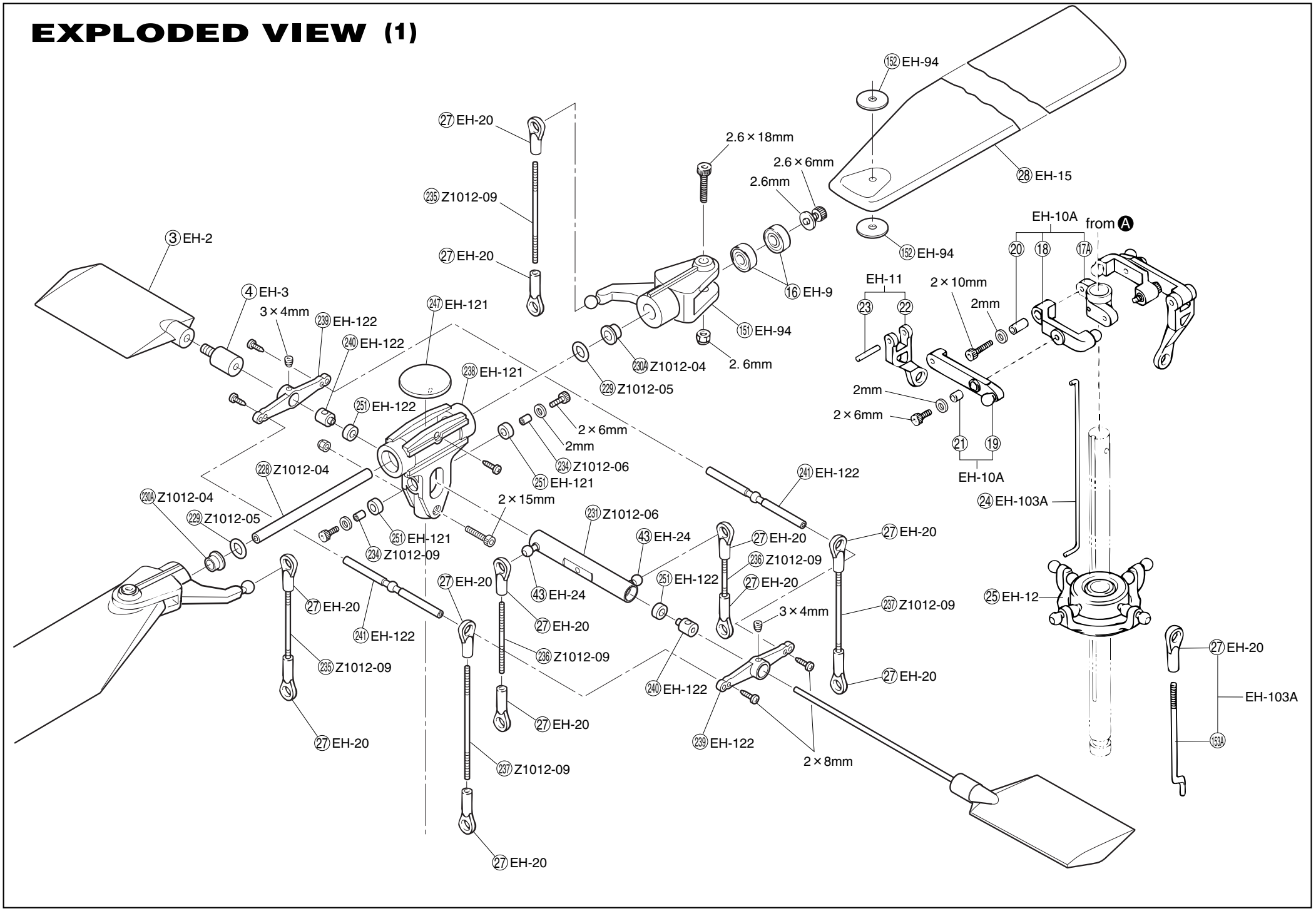

EXPLODED VIEW (2)

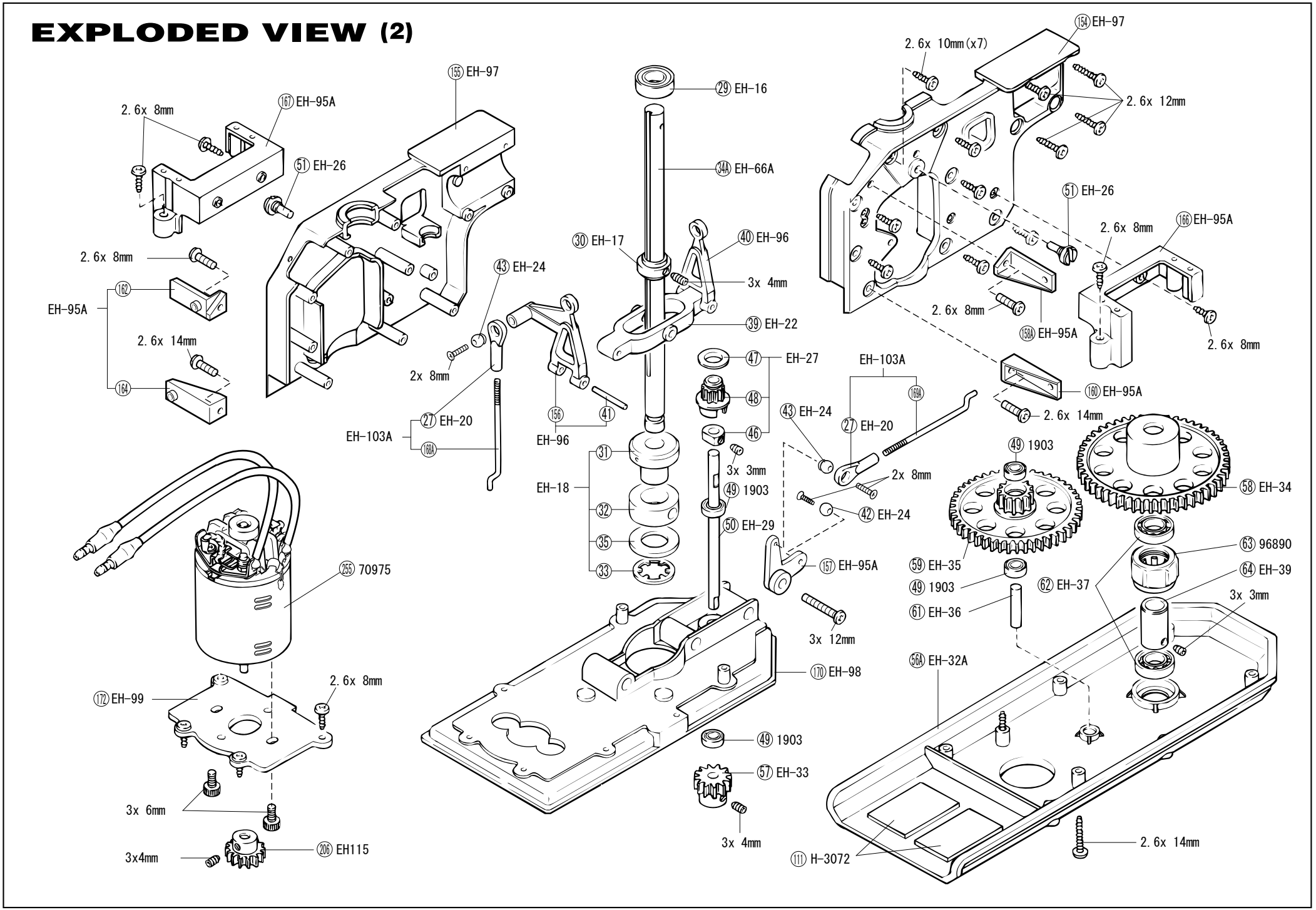
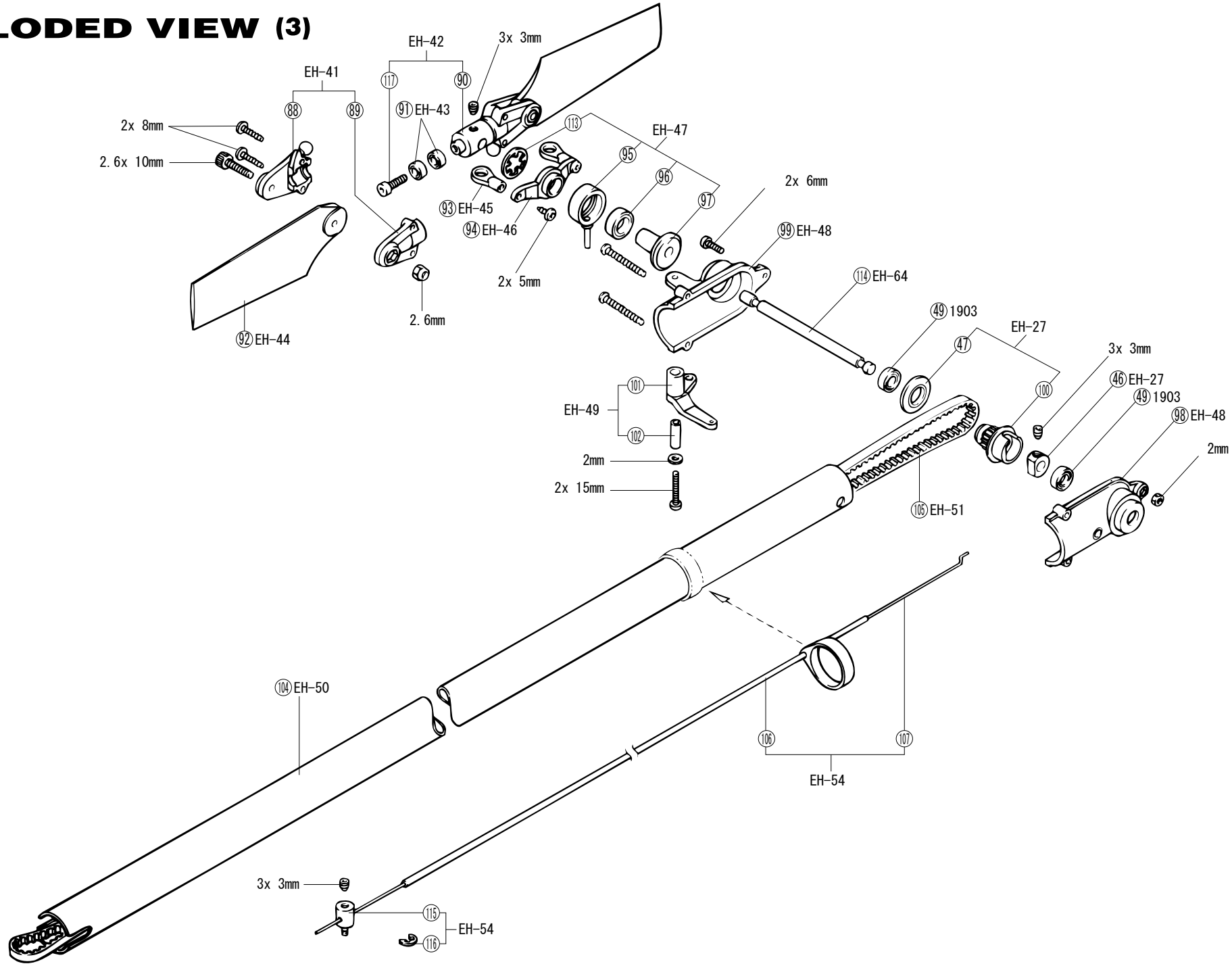
EXPLODED VIEW (3)