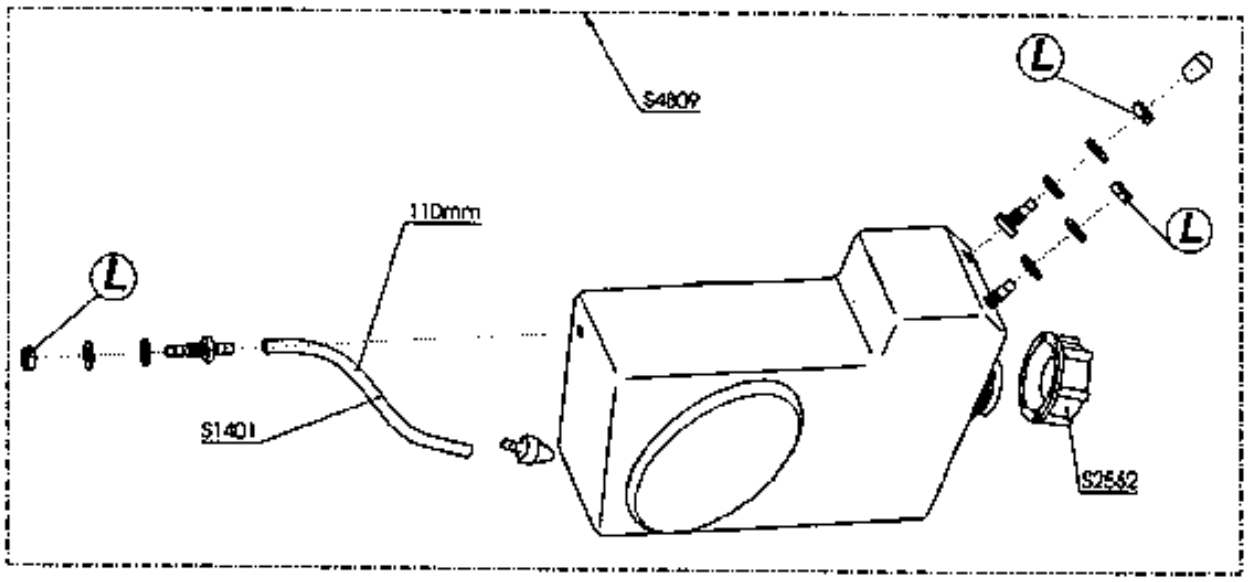
S4809
L
110mm
L
L
S1401
S2552

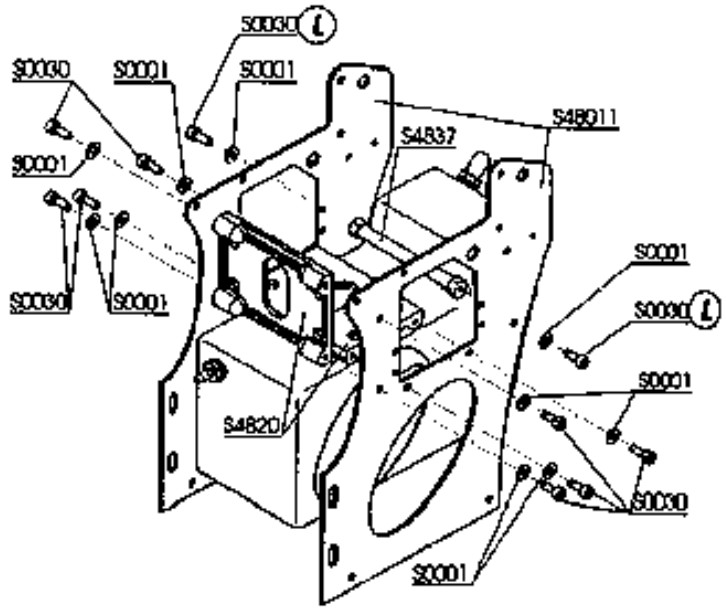
S0030 L
S0030
S0001
S0001
S48011
S4837
S0001
S0030
S0001
S0001
S0030 L
S4820
S0001
S0030
S0001

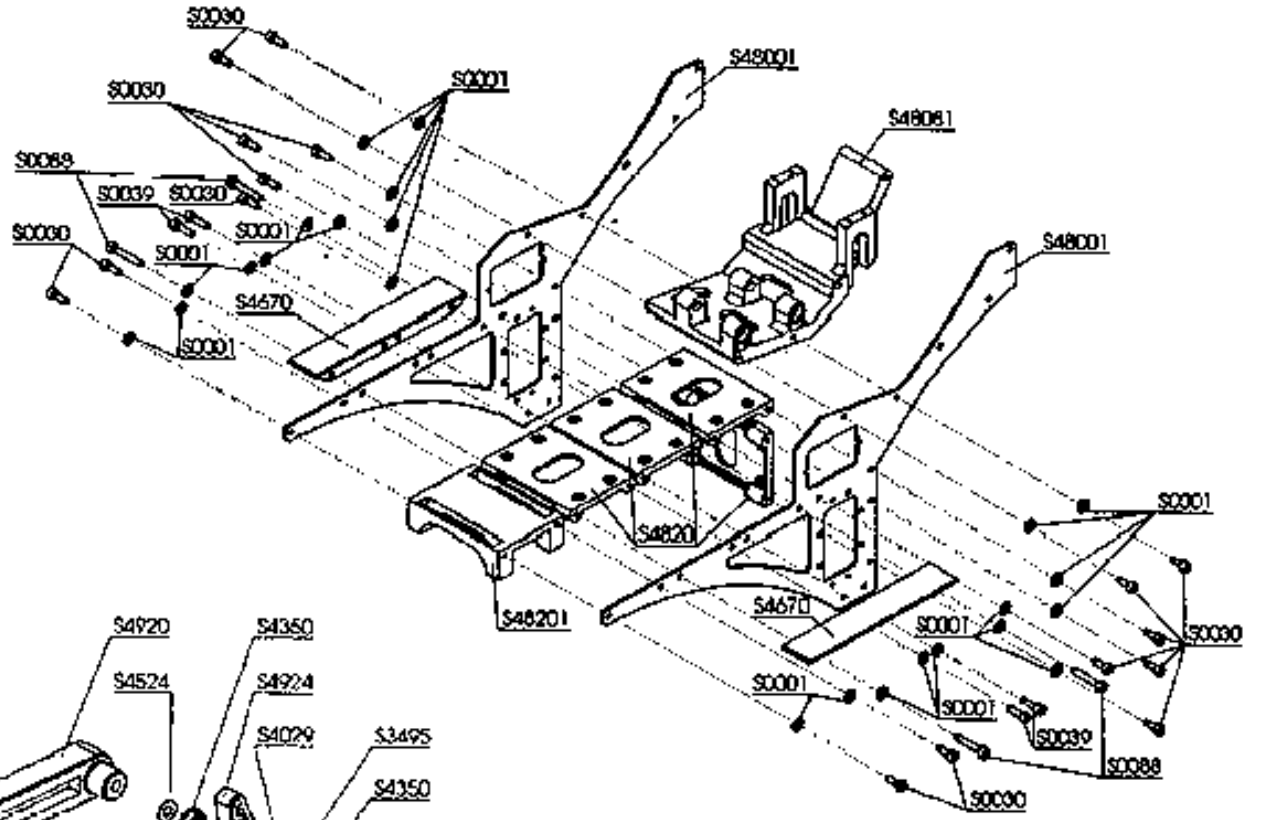
S2090
S48001
S0001
S0030
S48061
S0088
S0039
S0030
S0001
S0030
S0001
S48001
S4670
S0001
S0001
S4820
S48201
S4670
S0001
S0030
S0001
S0001
S0039
S0088
S0030

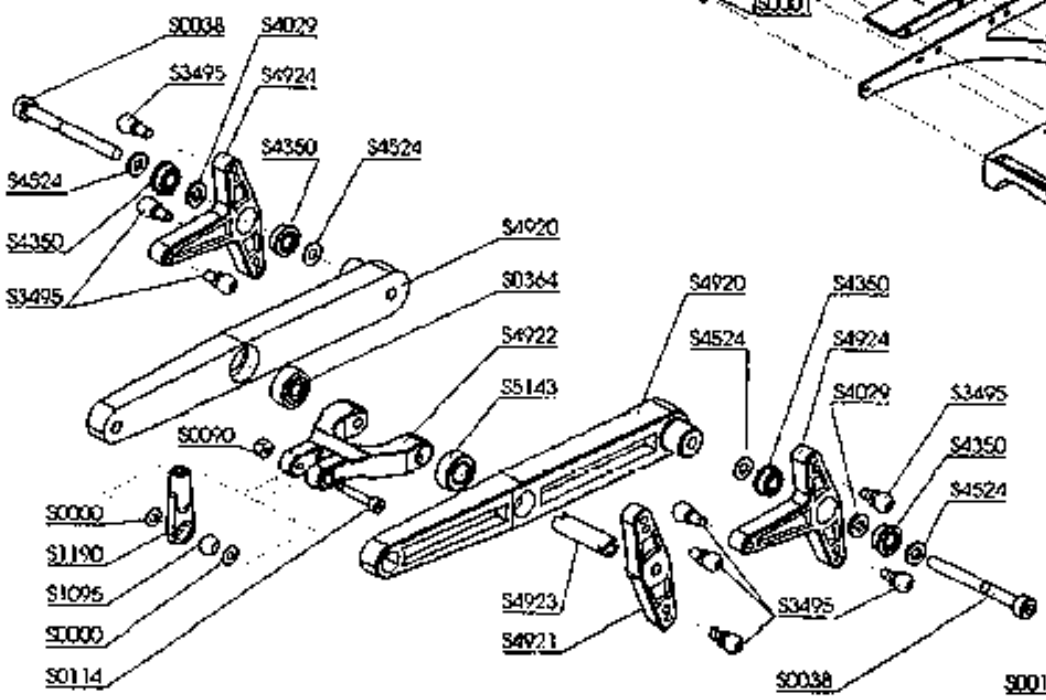
S0038
S4029
S3495
S4924
S4350
S4524
S4524
S4350
S3495
S4920
S0364
S4922
S5143
S0090
S0000
S1190
S1095
S0000
S0114
S4920
S4524
S4350
S4924
S4029
S3495
S4350
S4524
S4923
S4921
S3495
S0038

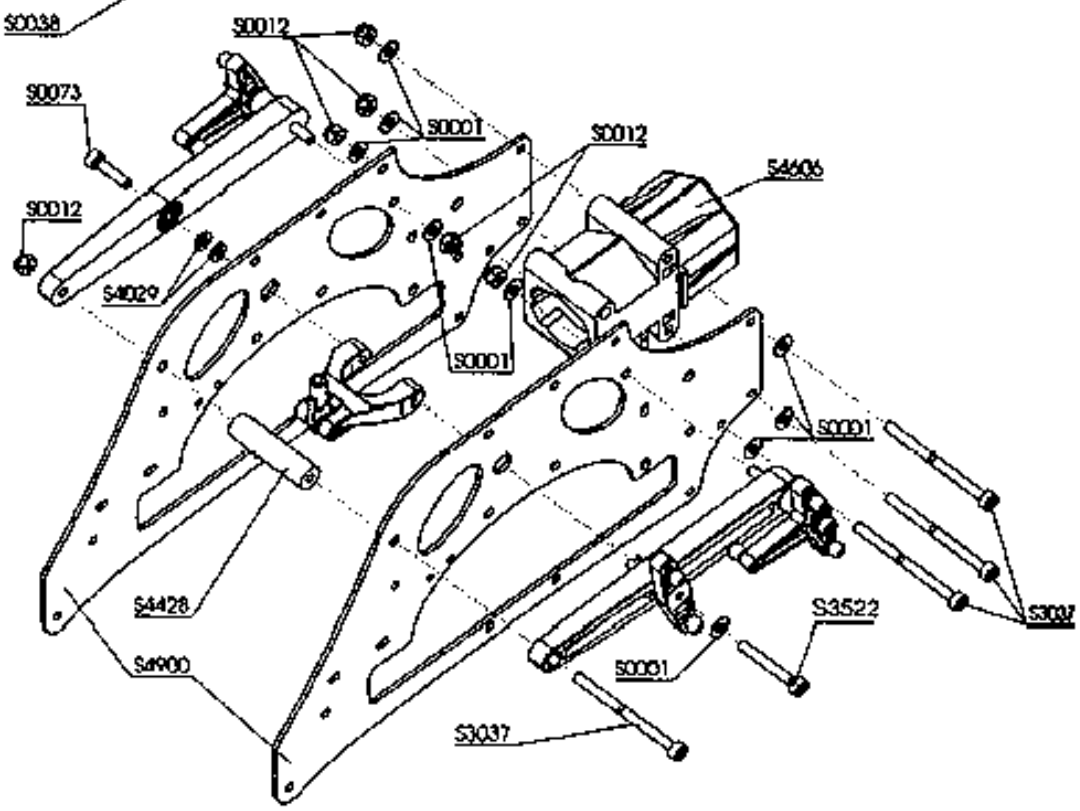
S0012
S0073
S0001
S0012
S4606
S0012
S4029
S0001
S0001
S4428
S3522
S3037
S4900
S0001
S3037

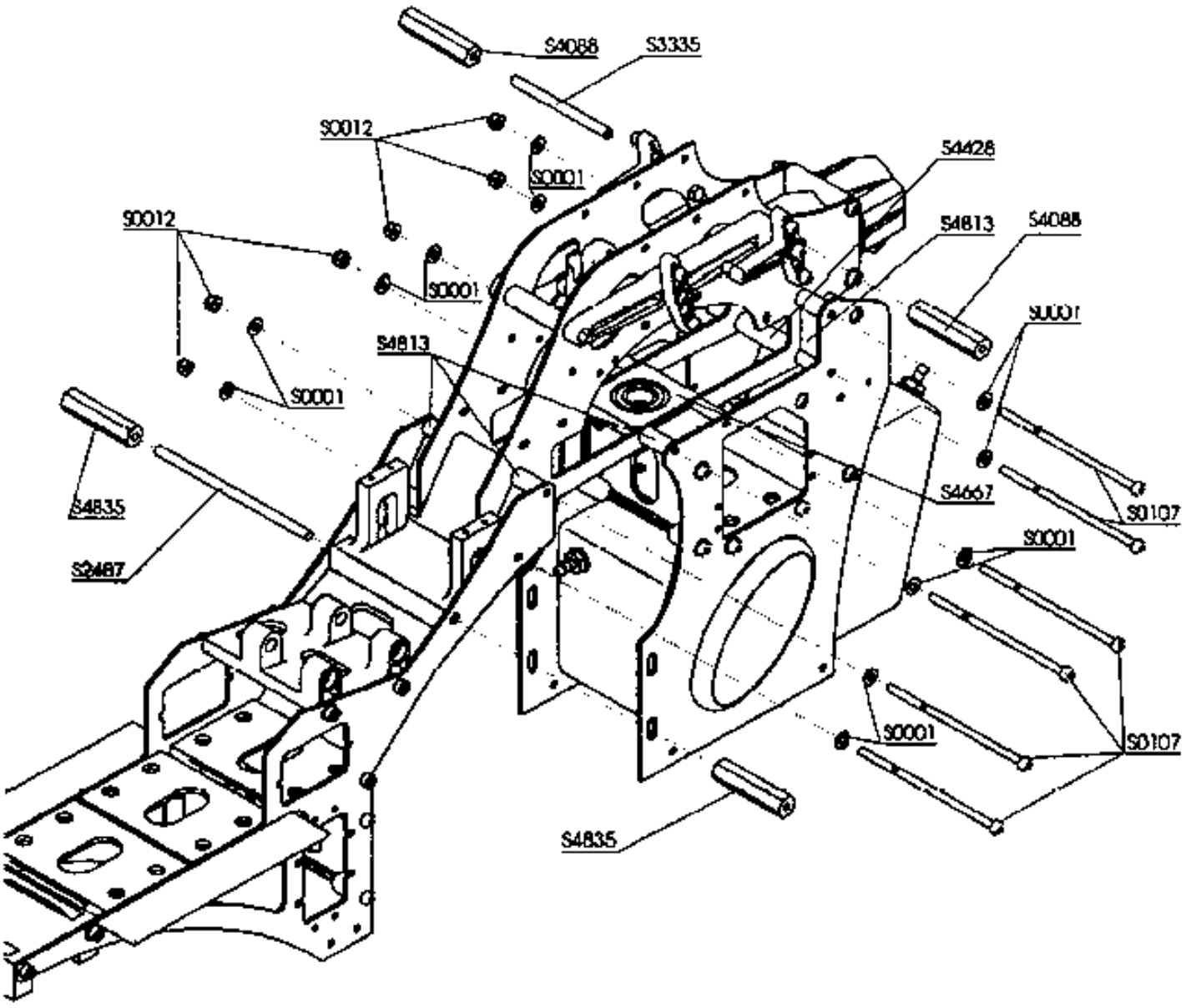
S4088
S3335
S0012
S0001
S4428
S4813
S4088
S0012
S0001
S0001
S4813
S0001
S4835
S2487
S4667
S0107
S0001
S0001
S0107
S4835

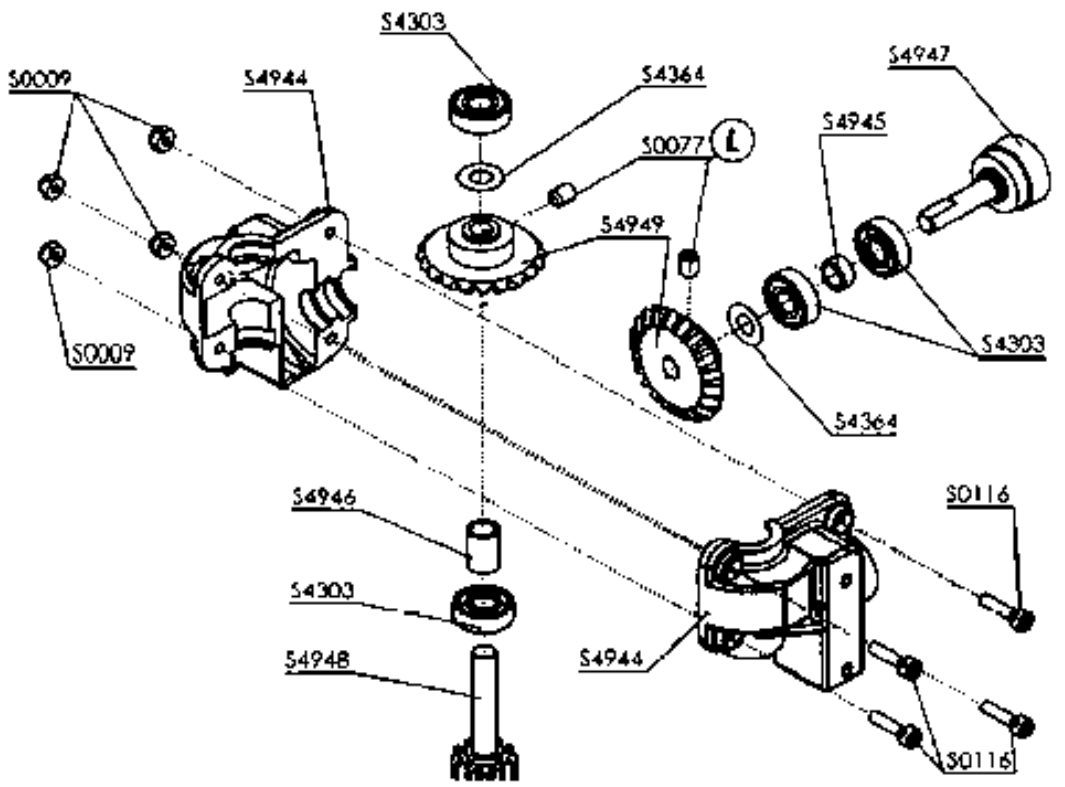
S4303
S0009
S4944
S4364
S4947
S0077 (L)
S4945
S4949
S0009
S4303
S4364
S4946
S0116
S4303
S4948
S4944
S0116

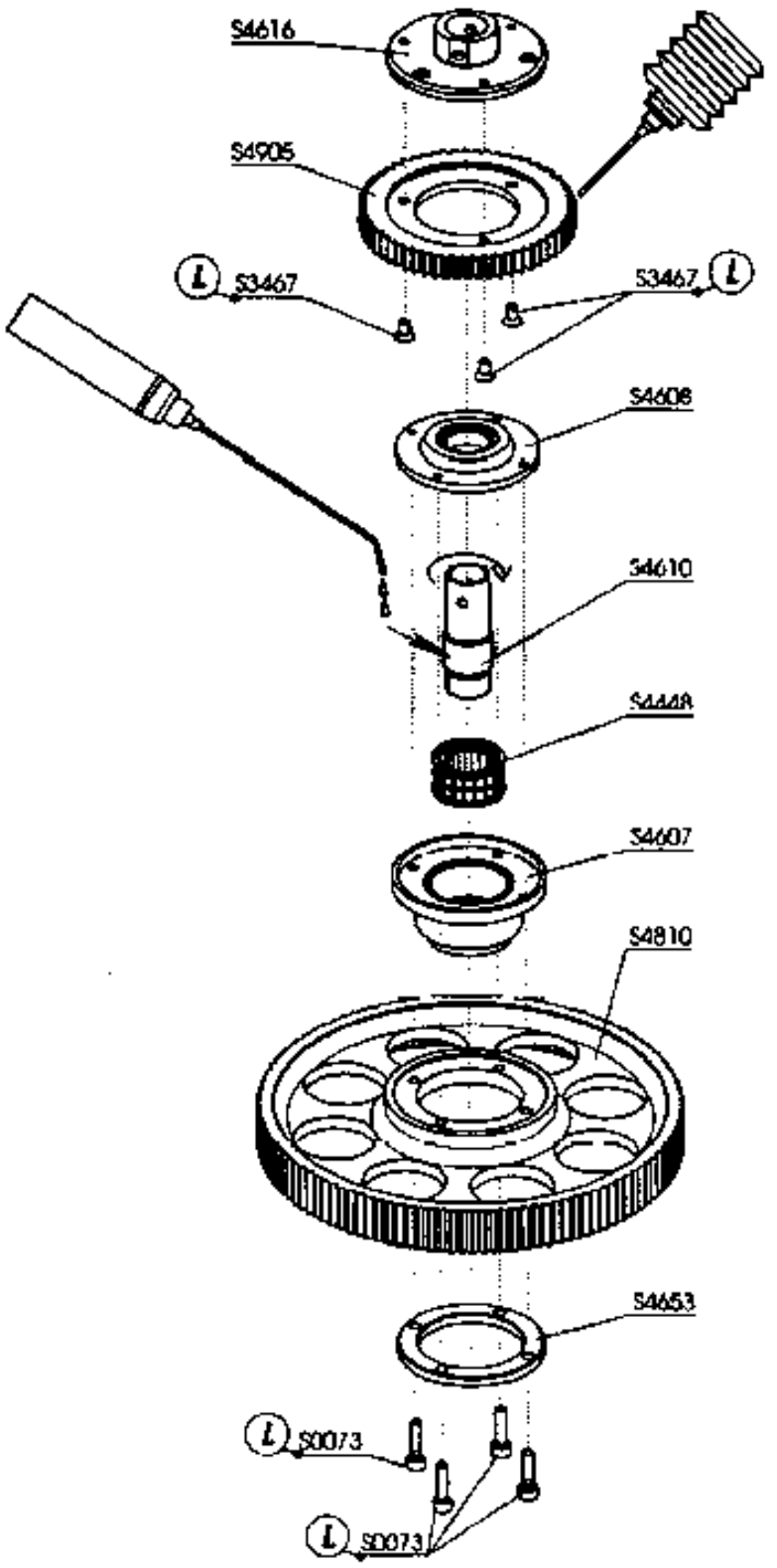
S4616
S4905
(L) S3467
S3467 (L)
S4608
S4610
S4448
S4607
S4810
S4653
(L) S0073
(L) S0073

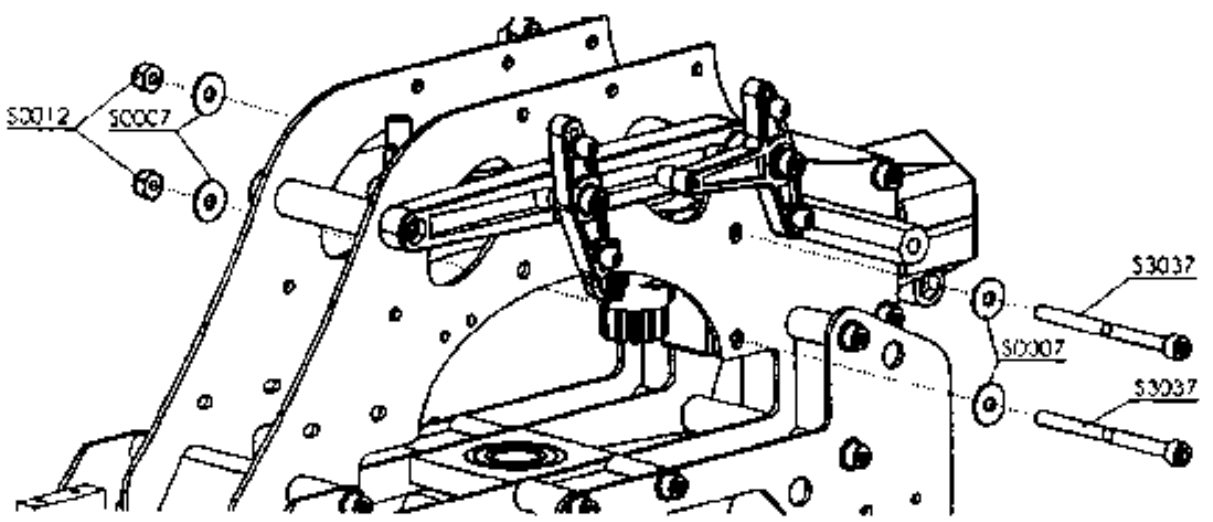
S0012
S0007
S3037
S0007
S3037

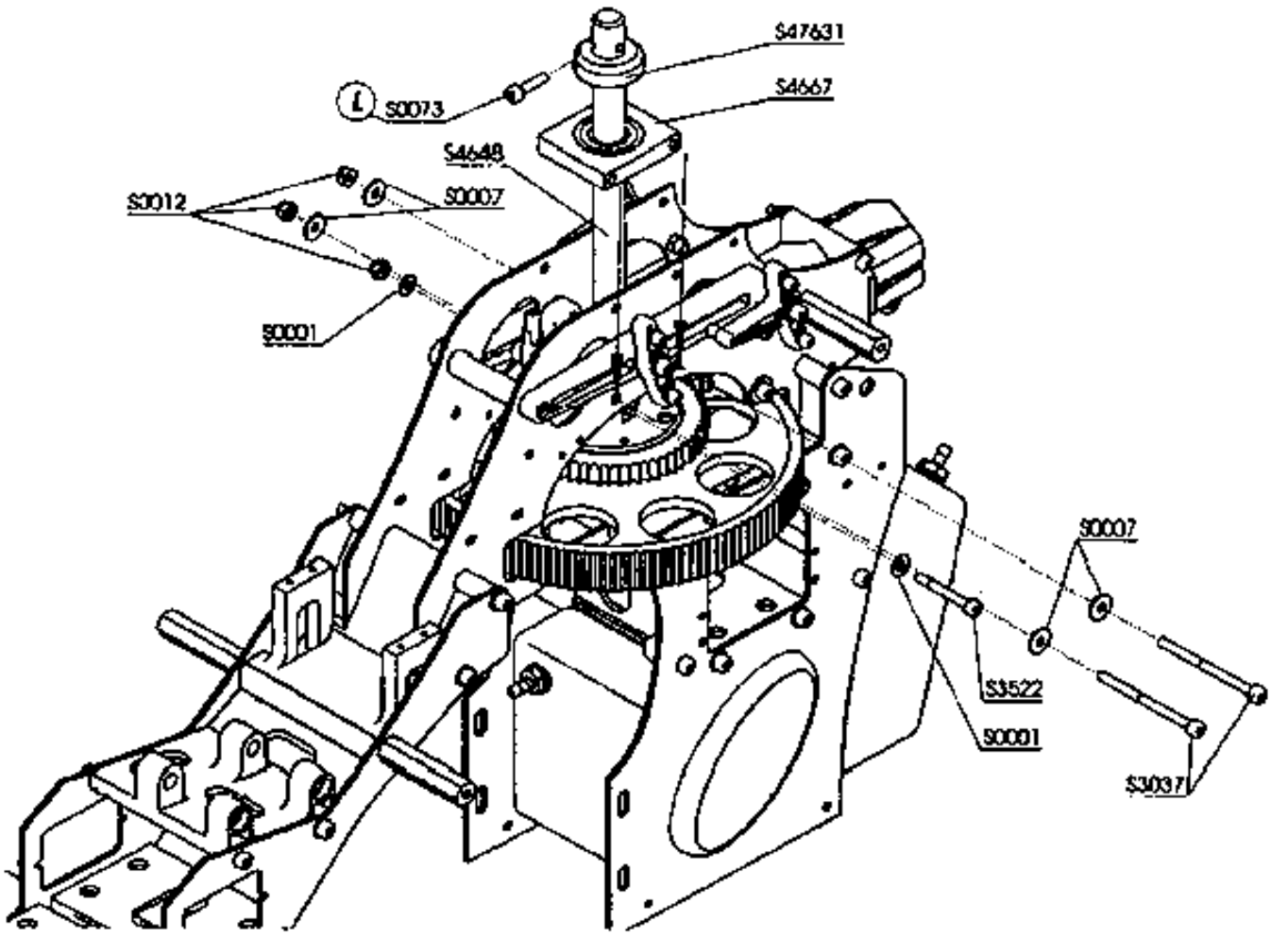
S47631
S4667
S0073
S4648
S3012
S0007
S0001
S0007
S3522
S0001
S3037

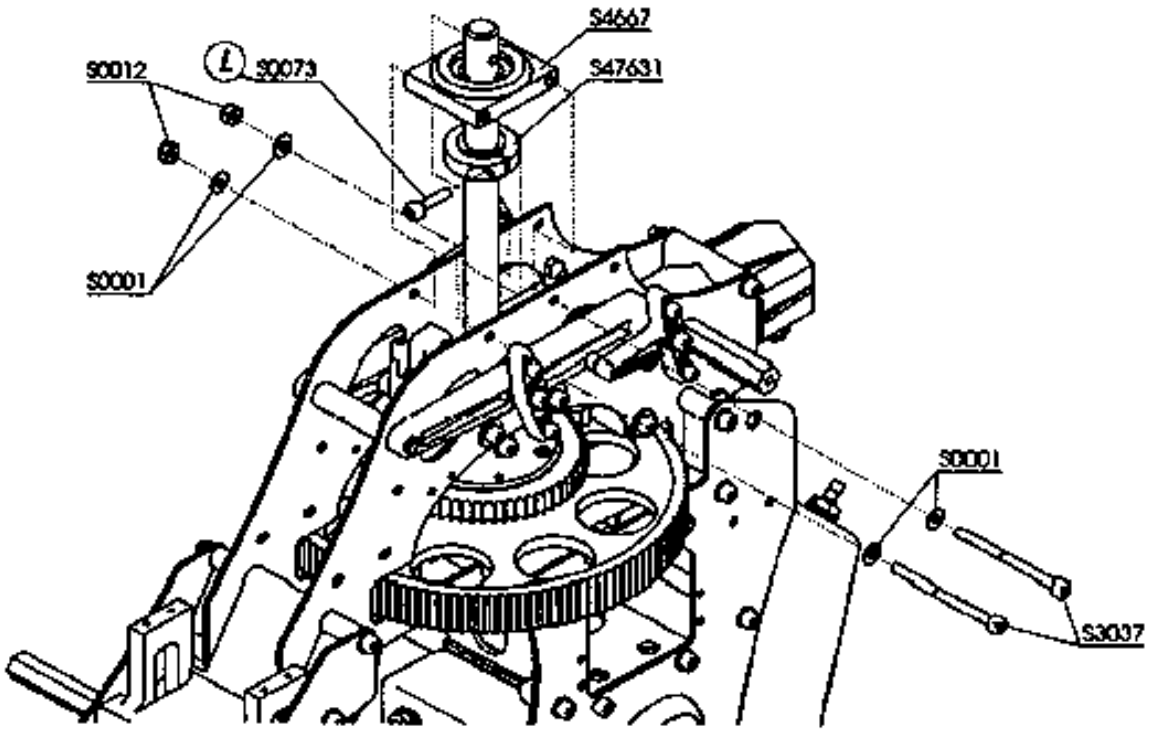
S4667
S0012
S0073
S47631
S0001
S0001
S3037

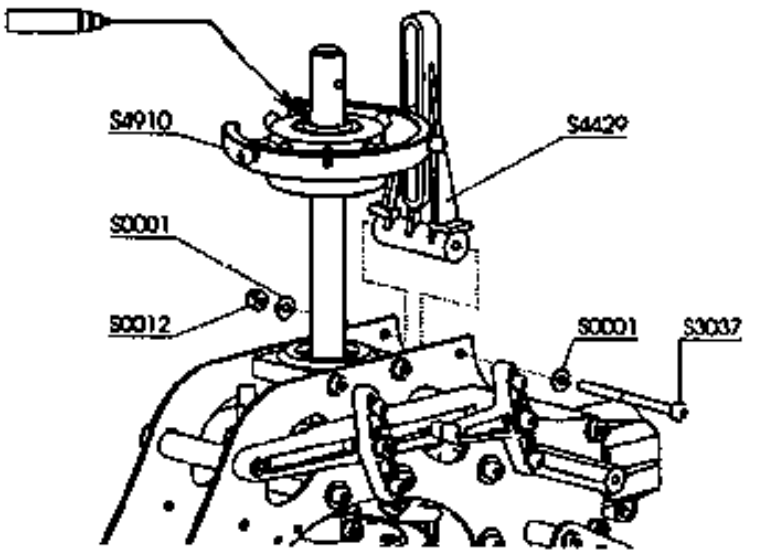
S4910
S4429
S0001
S0012
S0001
S3037

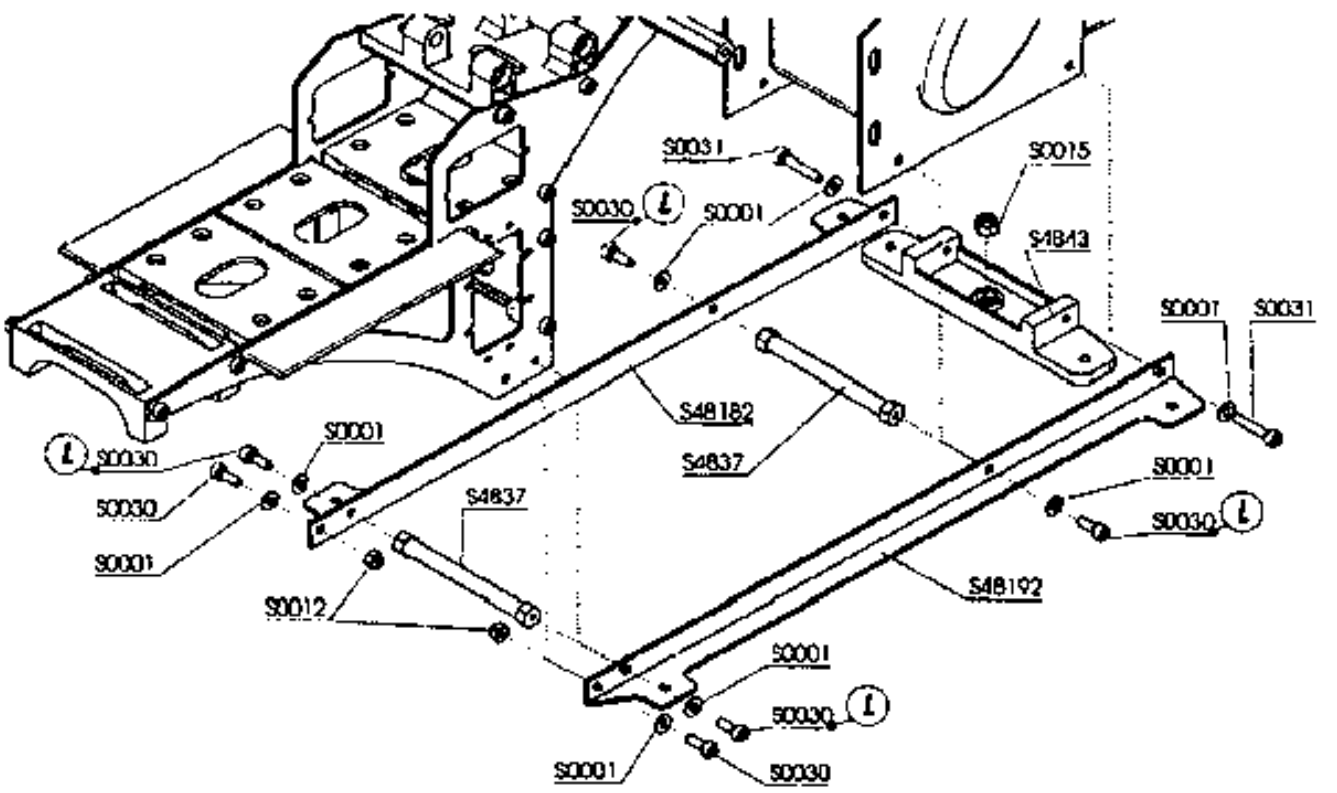
S0031
S0015
S0030
S0001
S4843
S0001
S0031
S48182
S0001
S0030
S4837
S0030
S0001
S4837
S0001
S0030
S48192
S0012
S0001
S0030
S0001
S0030

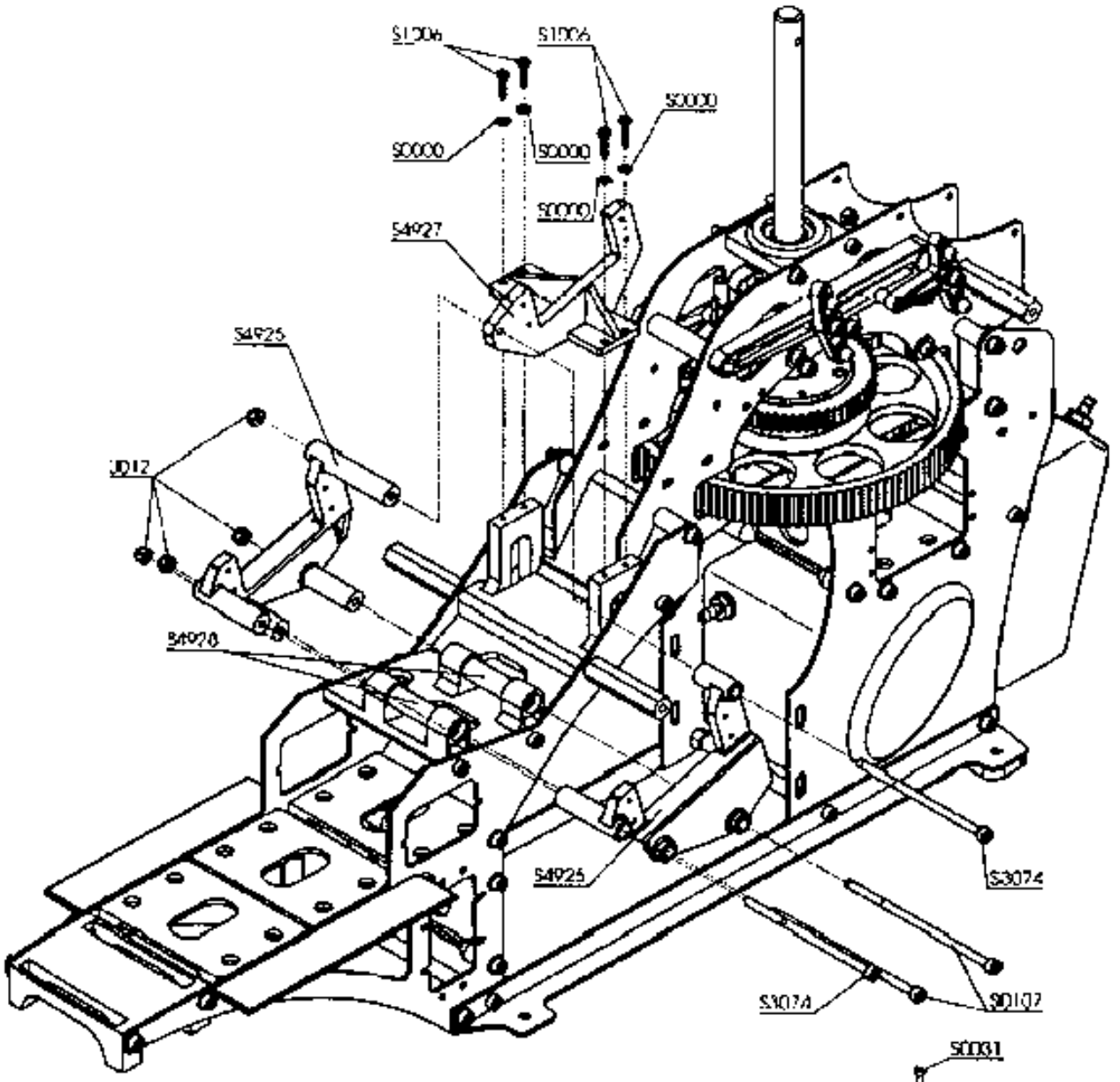
S1006
S1006
S0000
S0000
S0000
S0000
S4927
S4925
S0012
S4928
S4925
S3074
S3074
S0107

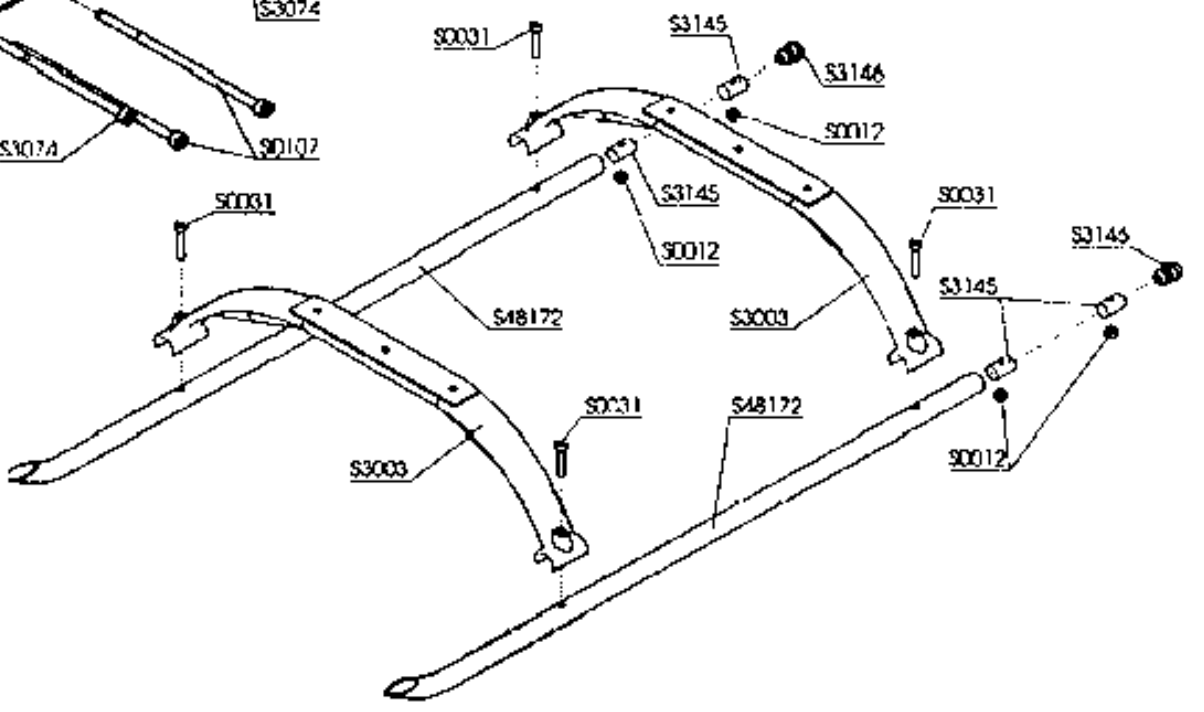
S0031
S3145
S3146
S0012
S3145
S0012
S0031
S0031
S3146
S3145
S48172
S3003
S0031
S48172
S3003
S0012

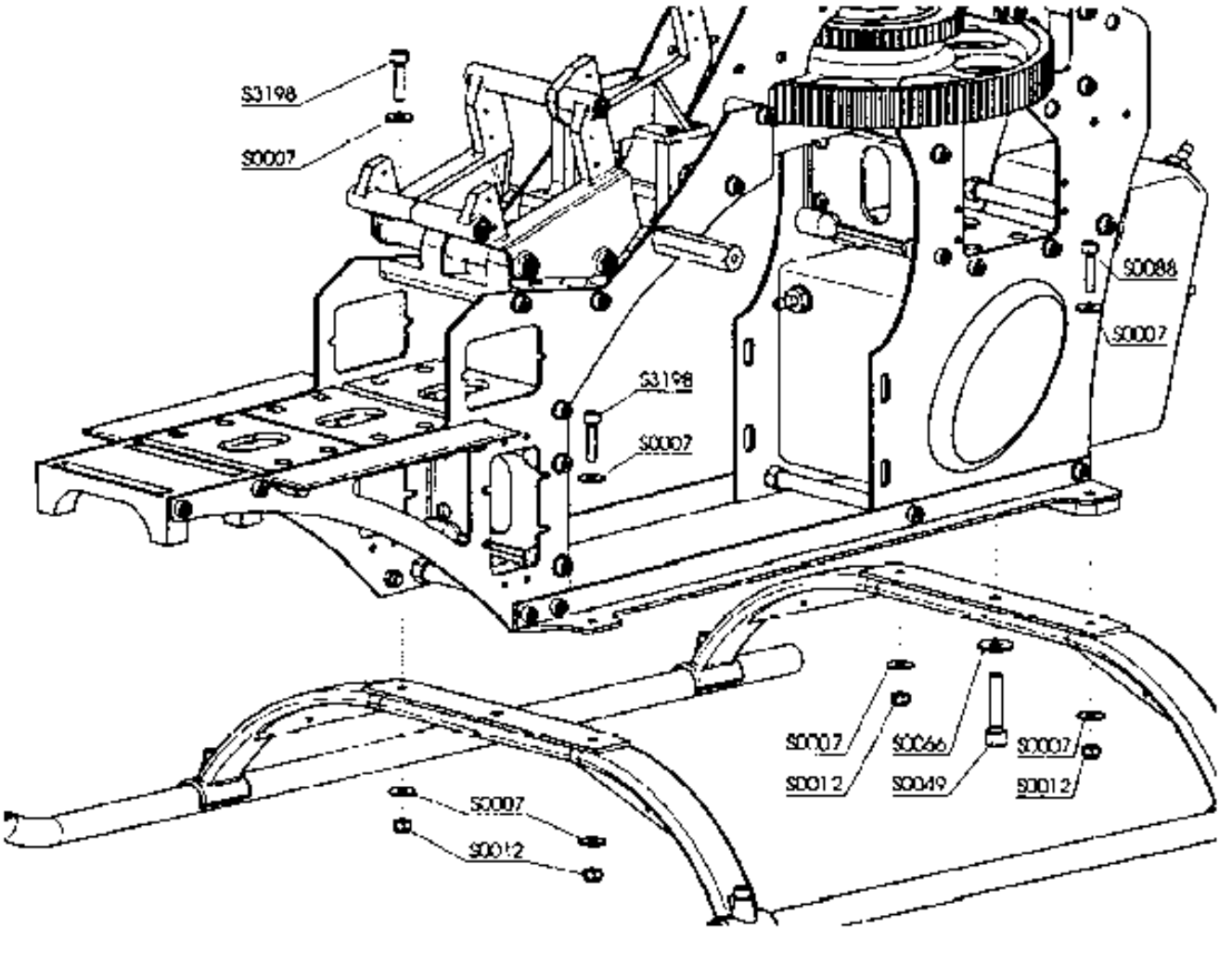
S3198
S0007
S0088
S0007
S3198
S0007
S0007
S0066
S0007
S0012
S0049
S0012
S0007
S0012

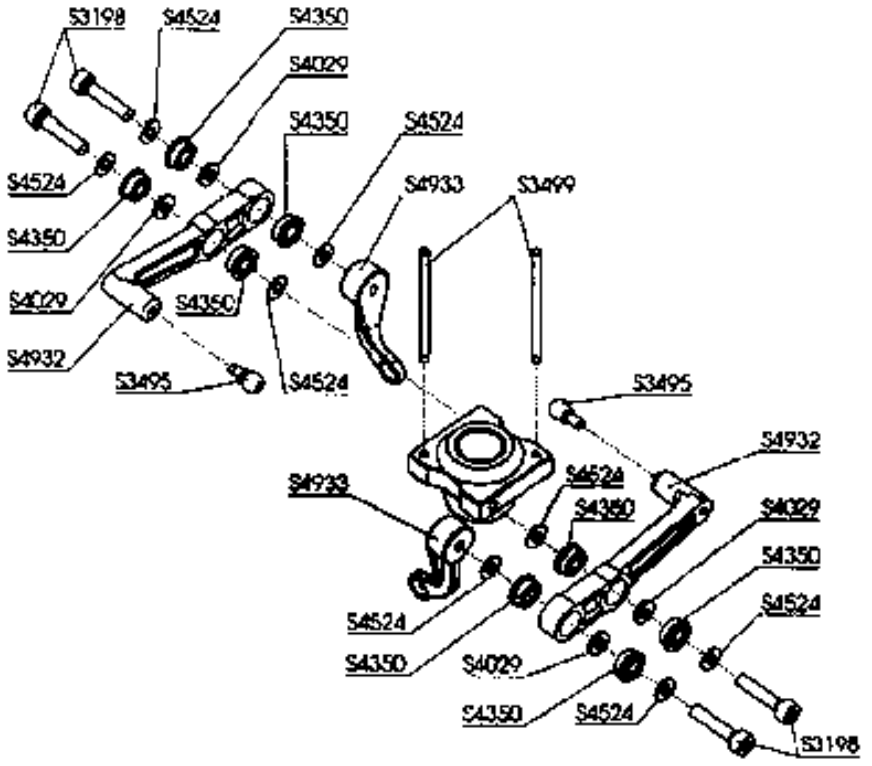
S3198
S4524
S4350
S4029
S4350
S4524
S4933
S3499
S4524
S4350
S4029
S4350
S4932
S3495
S4524
S3495
S4932
S4933
S4524
S4350
S4029
S4350
S4524
S4524
S4350
S4029
S4350
S4524
S3198

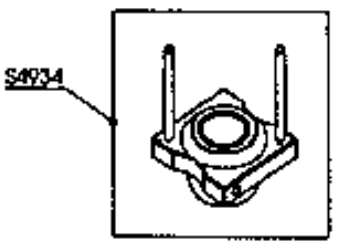
S4934

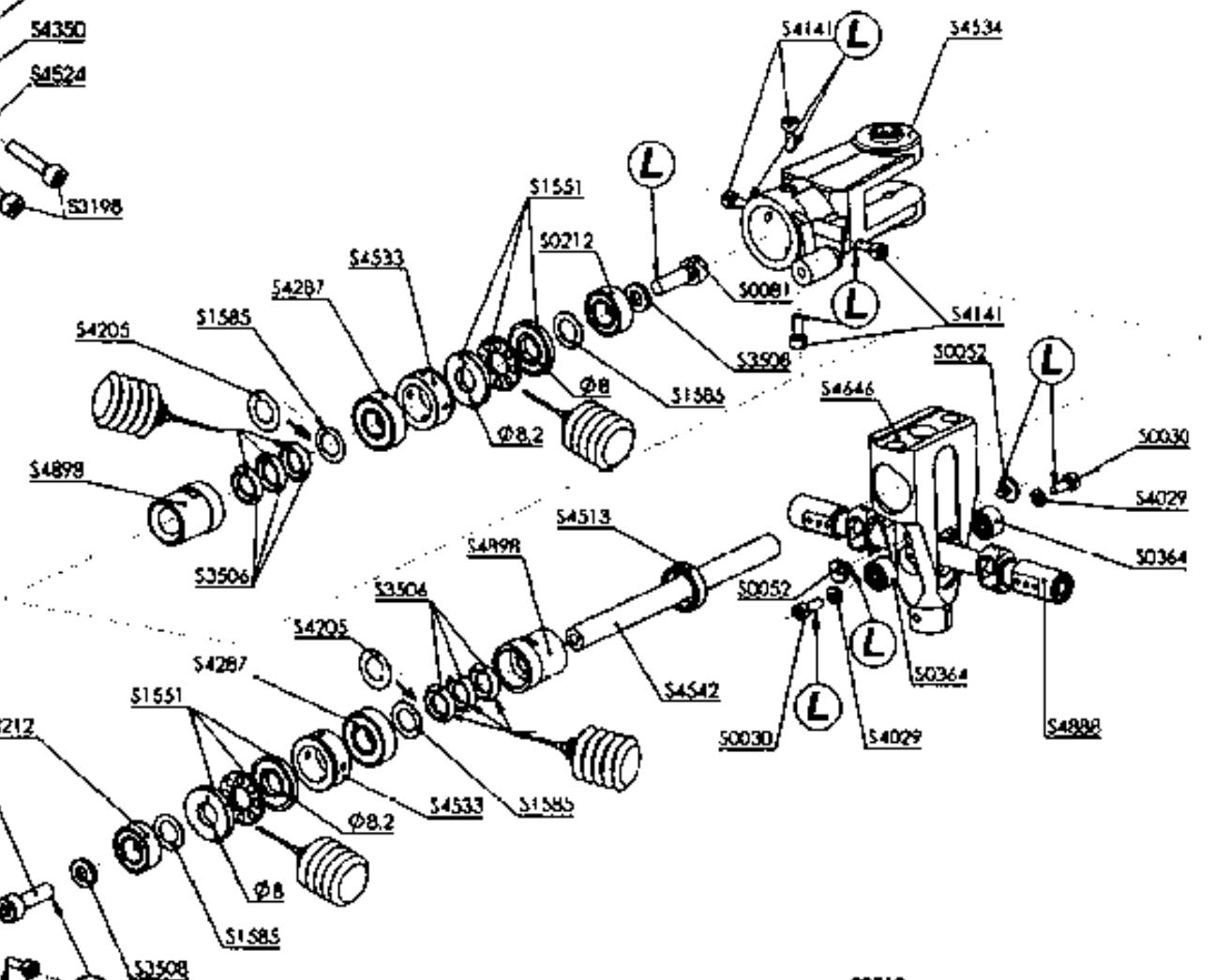
S4141
L
S4534
L
S1551
S0212
S4533
S4287
S1585
S4205
S0081
S3508
S4141
L
L
S1585
Ø8
Ø8.2
S4898
S3506
S0052
L
S4646
S0030
S4029
S4513
S4898
S3504
S0364
S0052
L
S4205
S4287
S4542
S0364
L
S0030
S4029
S4888
S4141
S1551
S0212
S0081
Ø8.2
S4533
S1585
L
Ø8
S1585
S3508
L
L
S4534
S4141

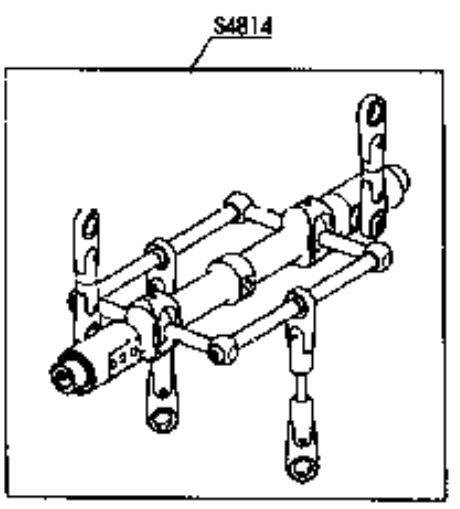
S4814

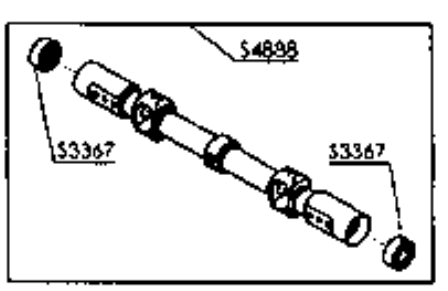
S4898
S3367
S3367

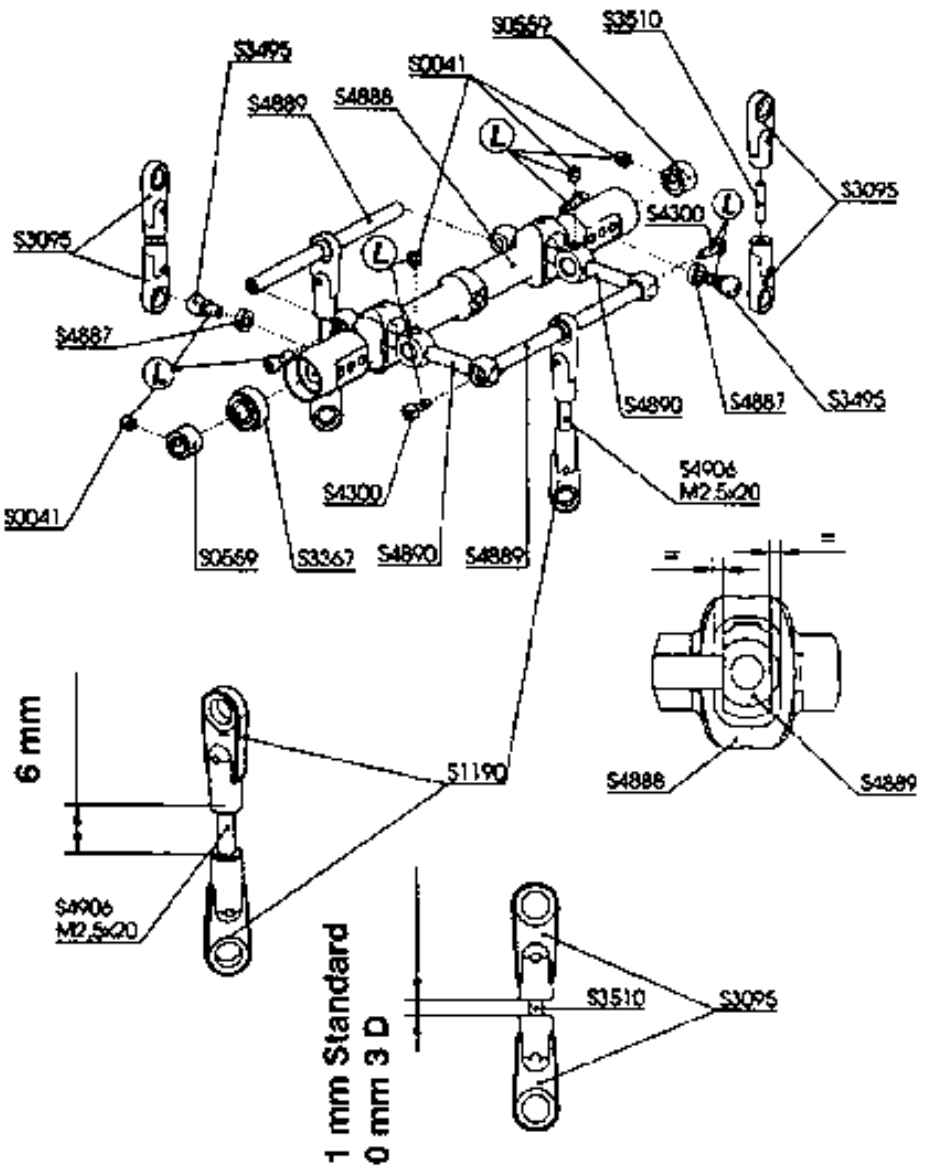
S0569
S3510
S3495
S0041
S4889
S4888
L
S3095
S4300
L
S3095
S4887
L
S4890
S4887
S3495
S4906
M2.5x20
S4300
S0041
S0569
S3367
S4890
S4889
=
=
6 mm
S1190
S4888
S4889
S4906
M2.5x20
1 mm Standard
0 mm 3 D
S3510
S3095

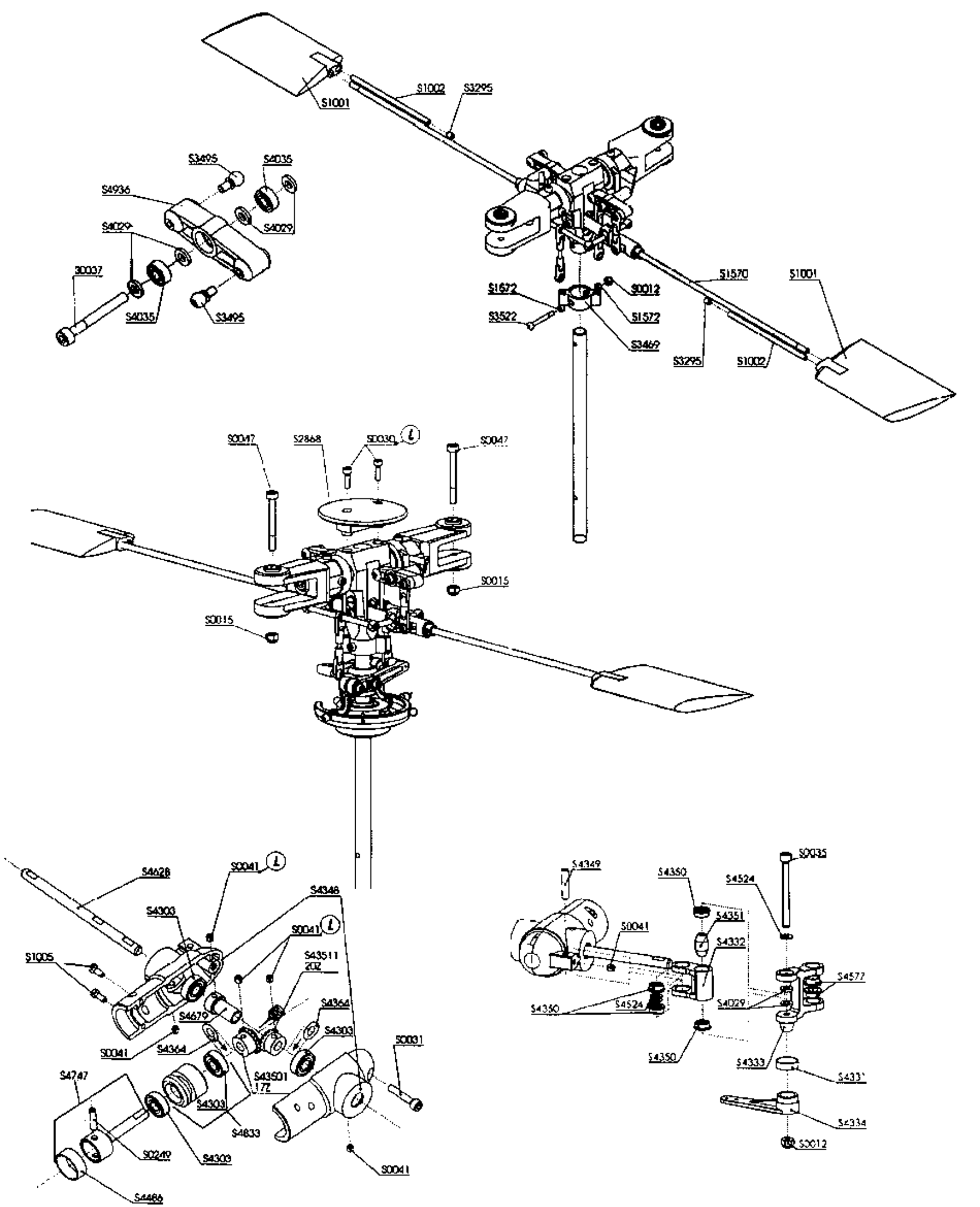
S1001
S1002
S3295
S3495
S4035
S4936
S4029
S4029
30037
S4035
S3495
S1570
S1001
S1672
S0012
S3522
S1572
S3469
S3295
S1002
S0047
S2868
S0030
S0047
S0015
S0015
S4628
S0041
S4348
S4303
S0041
S1005
S43511
20Z
S4364
S4679
S4303
S0041
S4364
S0031
S4747
S43501
17Z
S4303
S4833
S0249
S4303
S0041
S4486
S4349
S4350
S4524
S0035
S4351
S0041
S4332
S4577
S4350
S4524
S4029
S4350
S4333
S4331
S4334
S0012

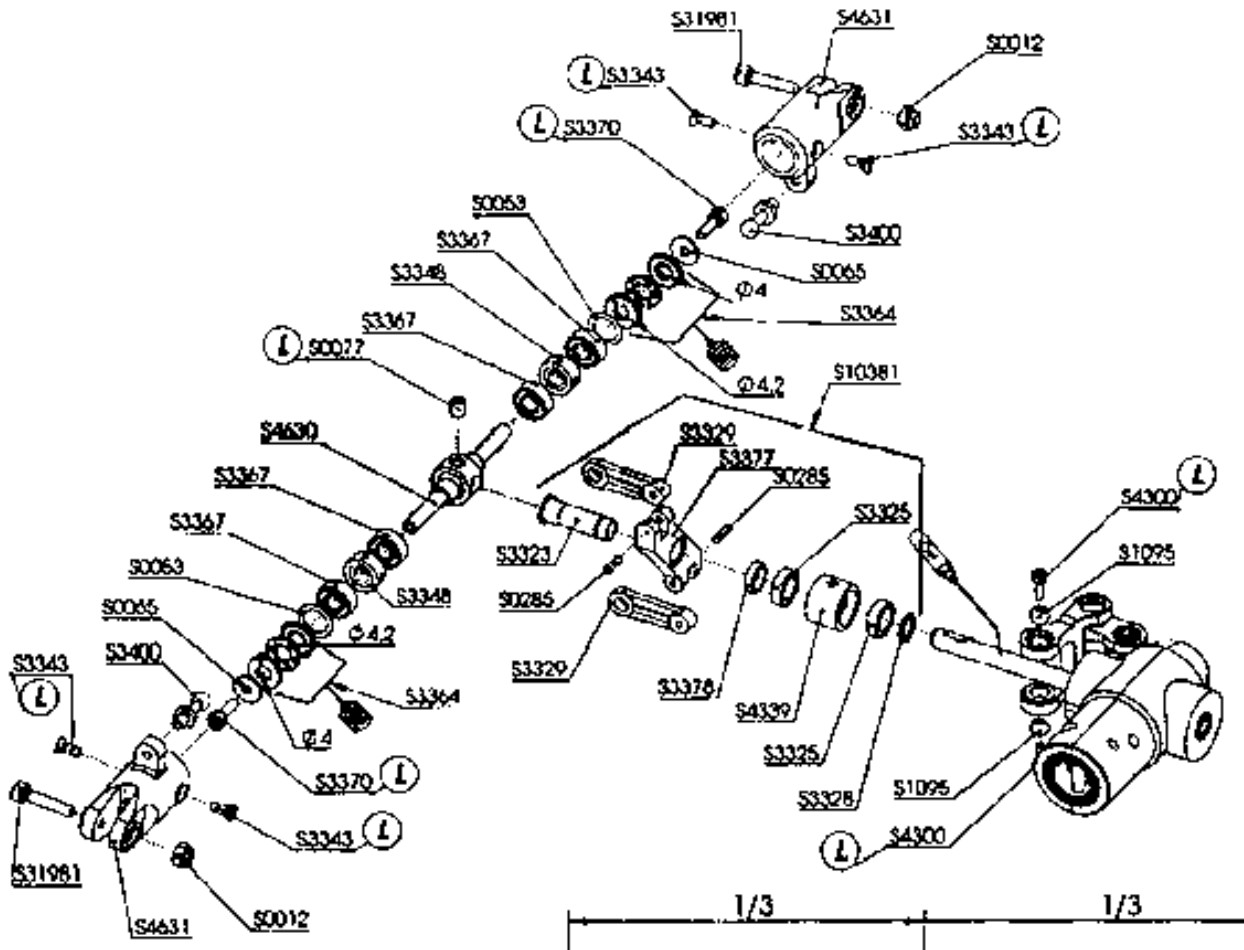
S31981
S4631
S0012
S3343
S3370
S3400
S0063
S3367
S3348
S0065
Ø4
S3364
S0027
Ø4,2
S10381
S4630
S3329
S3377
S0285
S3325
S4300
S1095
S3323
S3329
S3378
S4339
S3328
Ø4,2
Ø4

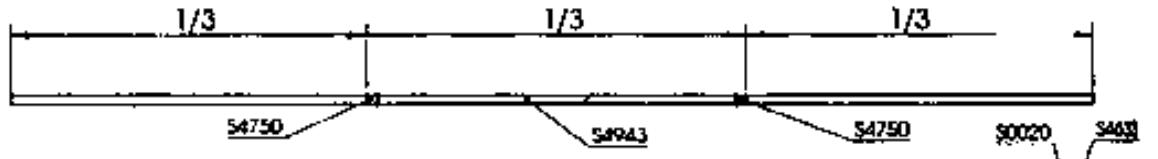
1/3
1/3
1/3
S4750
S4943
S4750

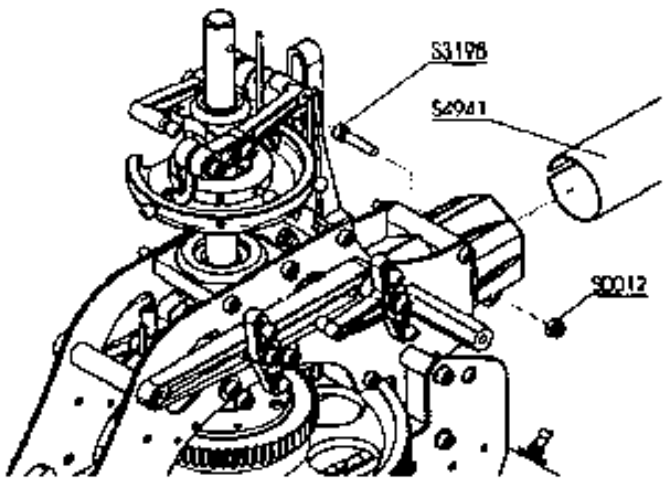
S3198
S4941
S0012

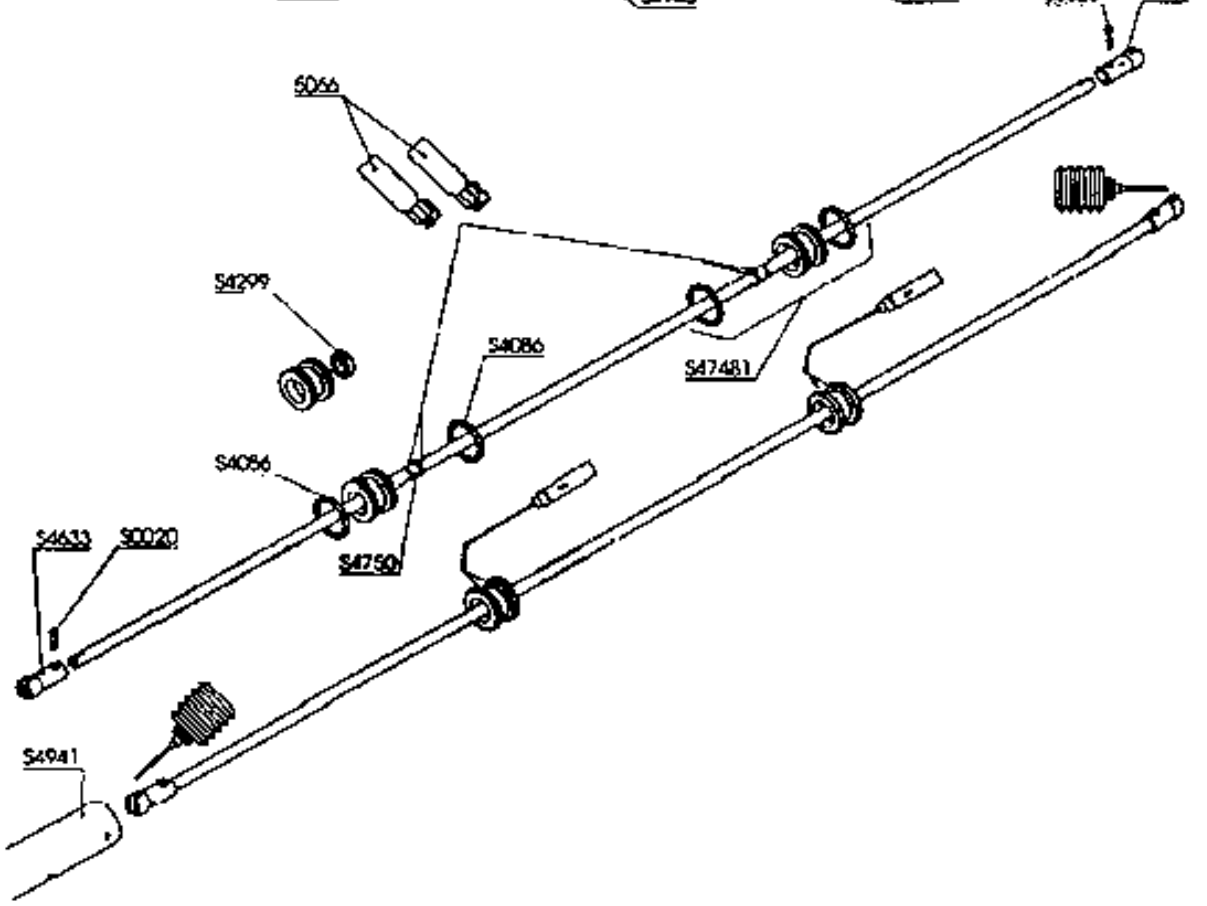
S0020
S4633
S6066
S4299
S4086
S47481
S4086
S4633
S0020
S4750
S4941

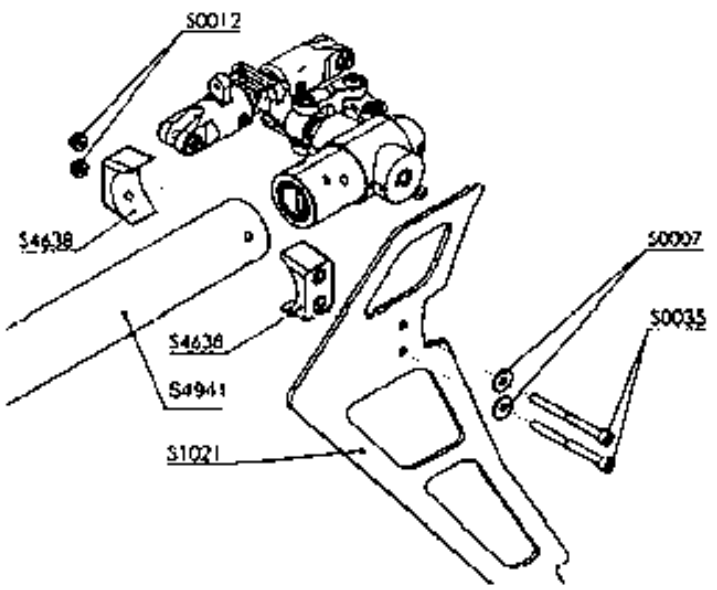
S0012
S4638
S0007
S0035
S4638
S4941
S1021

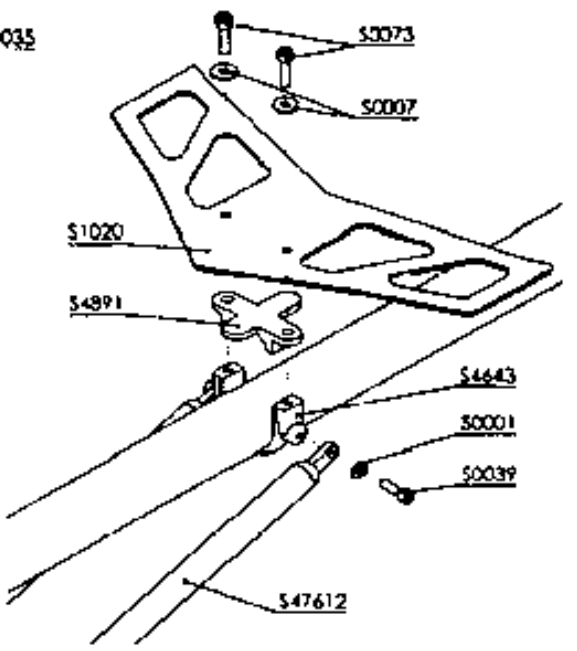
S3073
S0007
S1020
S4891
S4643
S0001
S0039
S47612

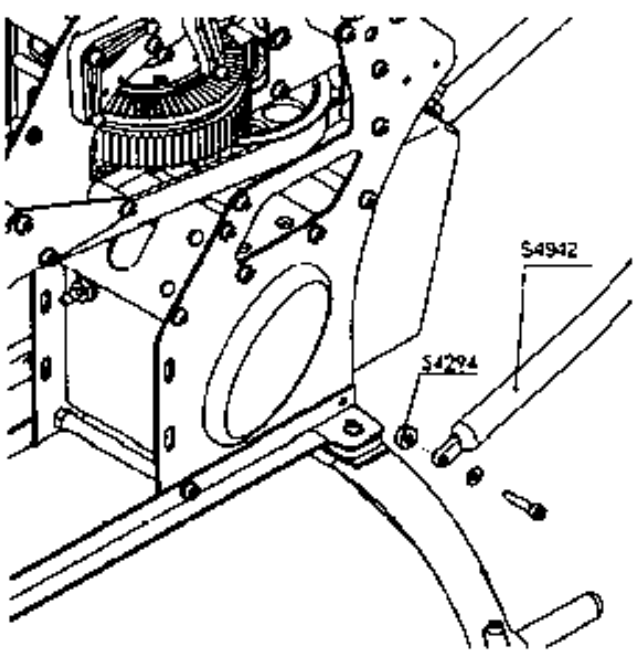
S4942
S4294

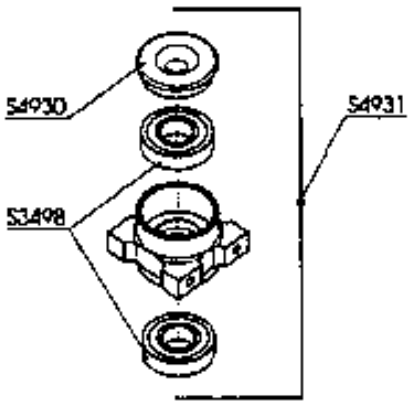
S4930
S4931
S3498

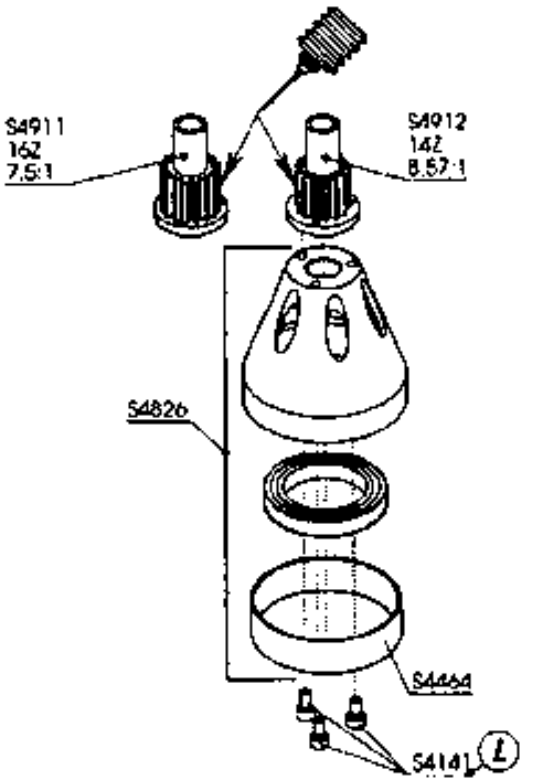
S4911
16Z
7,5:1
S4912
14Z
8,57:1
S4826
S4464
S4141

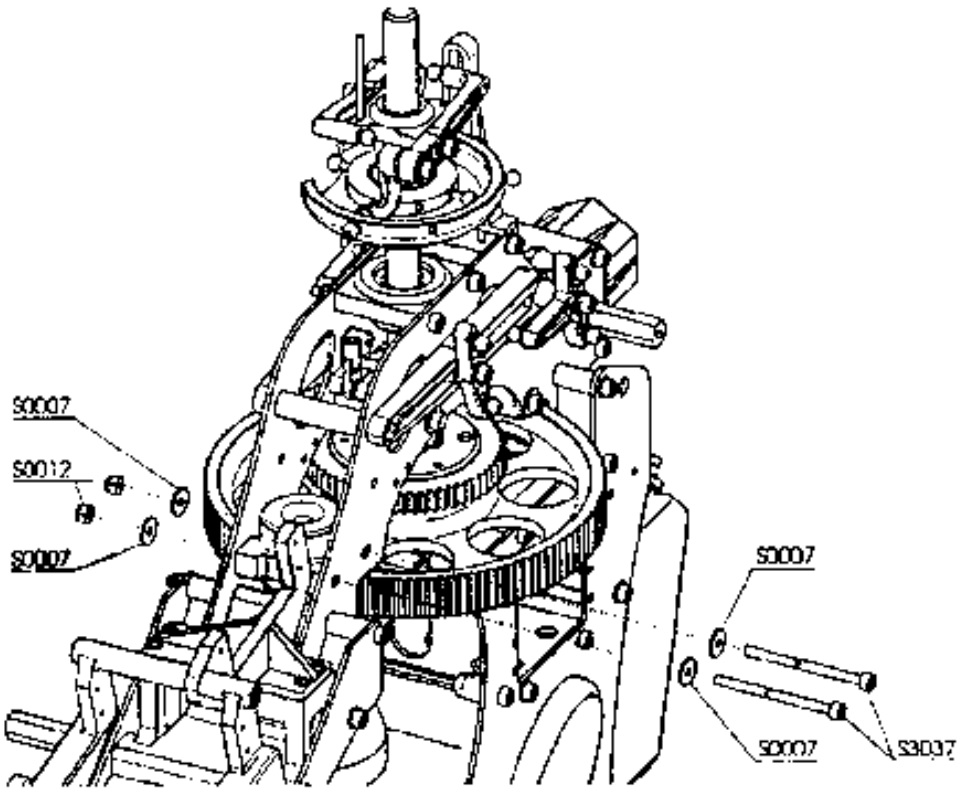
S0007
S0012
S0007
S0007
S0007
S3037

S0500
S4805

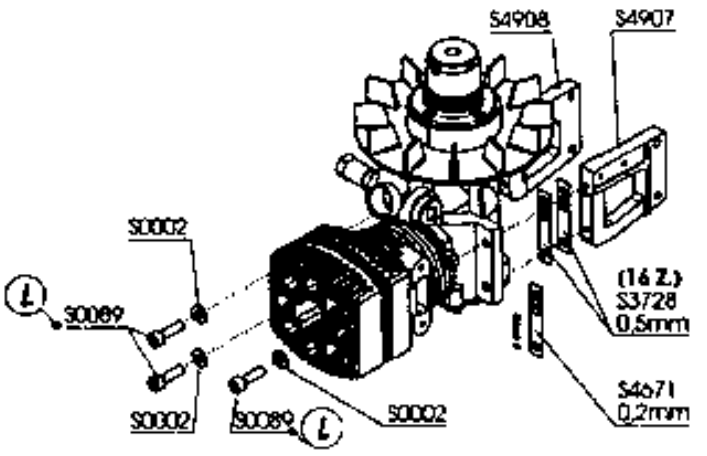
S4908
S4907
S0002
S0089
S0002
S0089
S0002
(16 Z.)
S3728
0,5mm
S4671
0,2mm

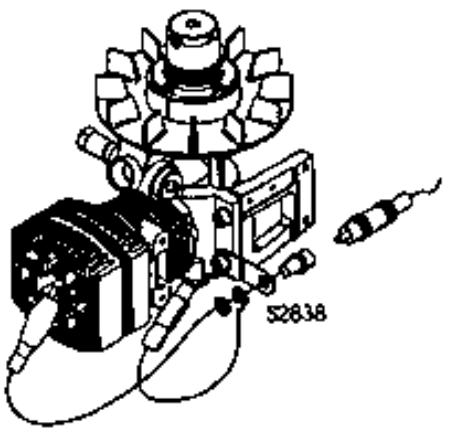
S2838

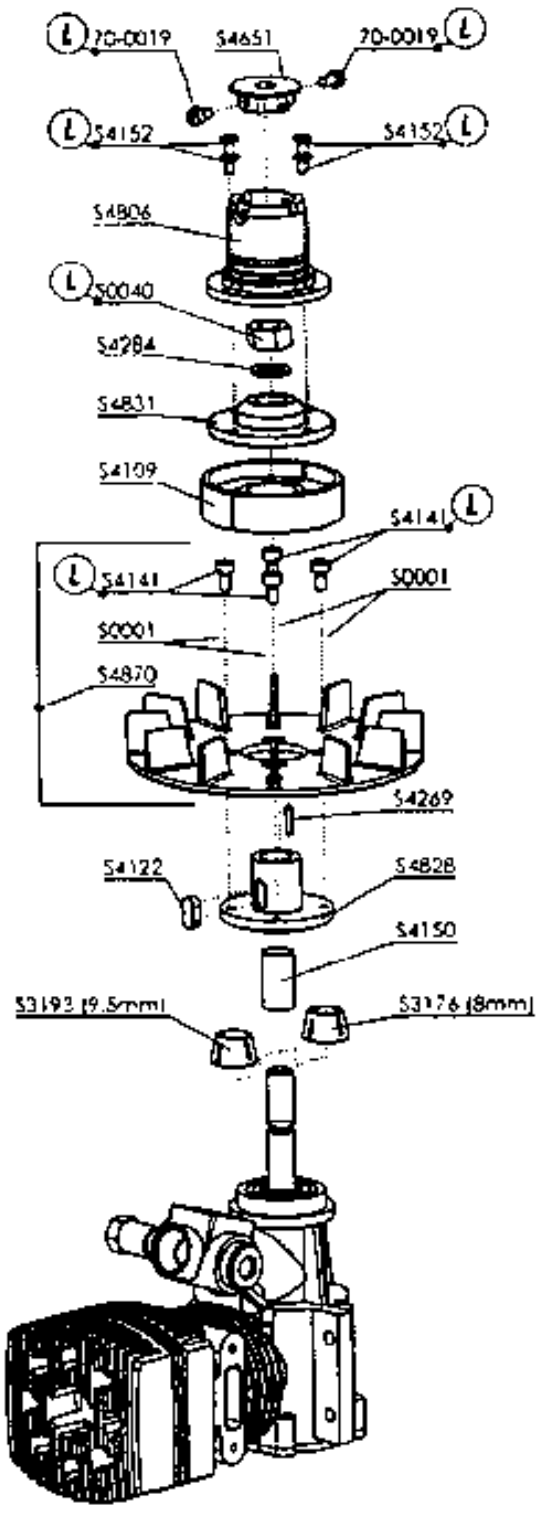
70-0019
S4651
70-0019
S4152
S4152
S4806
S0040
S4284
S4831
S4109
S4141
S4141
S0001
S0001
S4870
S4269
S4122
S4828
S4150
S3193 (9,5mm)
S3176 (8mm)

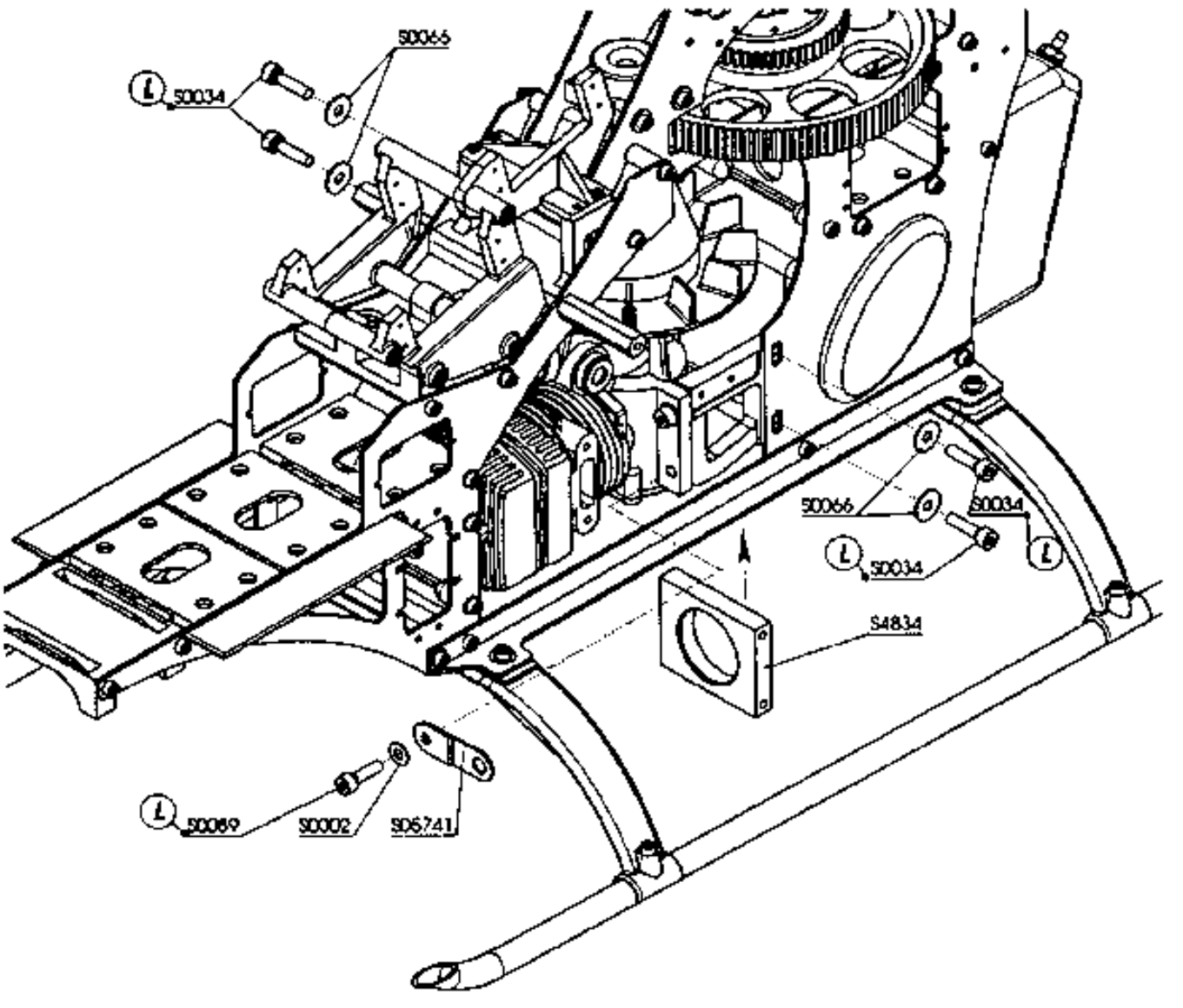
S0066
S0034
S0066
S0034
S0034
S4834
S0069
S0002
S06741

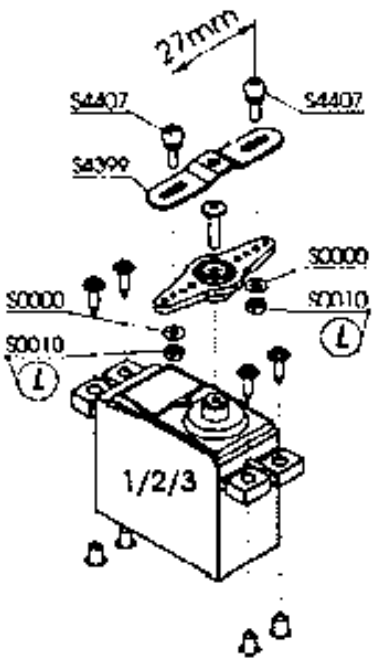
27mm
S4407
S4407
S4399
S0000
S0000
S0010
S0010
1/2/3

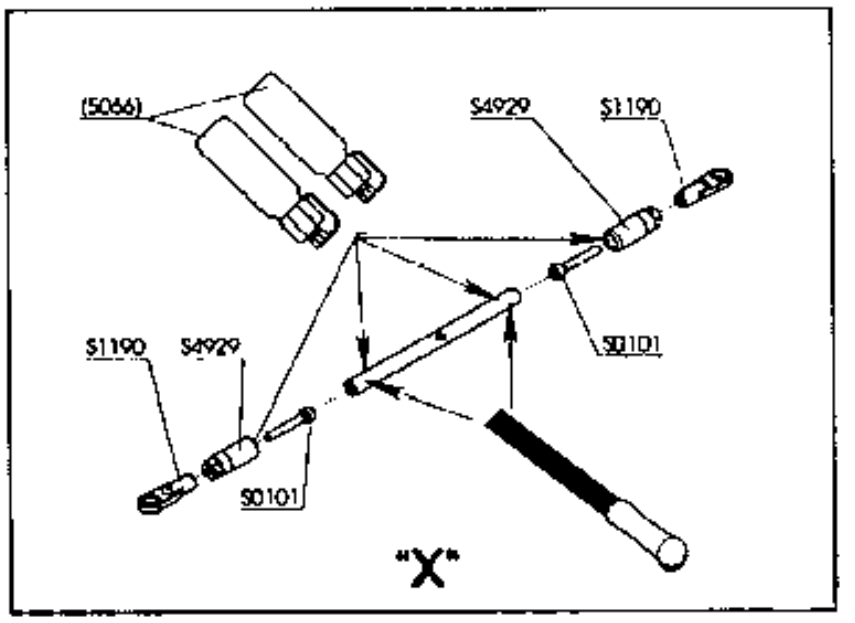
(5066)
S4929
S1190
S1190
S4929
S0101
S0101
"X"

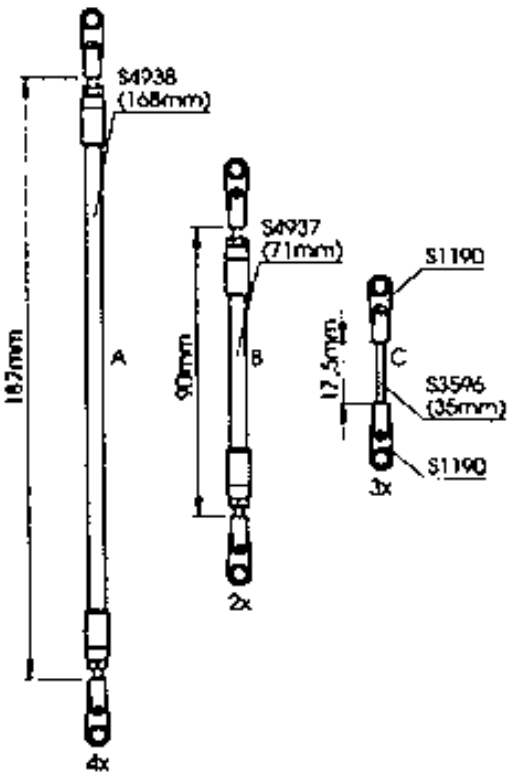
S4938
(168mm)
182mm
A
4x
S4937
(71mm)
90mm
B
2x
S1190
12,5mm
C
S3596
(35mm)
S1190
3x

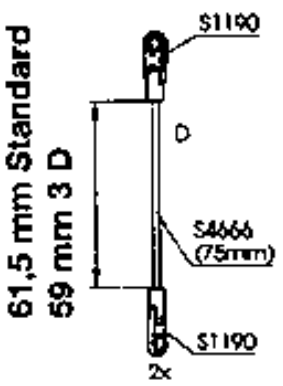
61,5 mm Standard
59 mm 3 D
S1190
D
S4666
(75mm)
S1190
2x

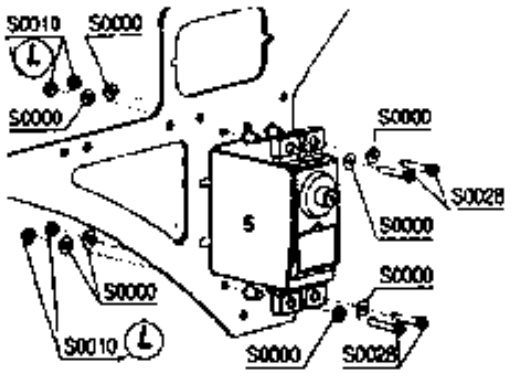
S0010
S0000
S0000
S0000
S0028
S0000
S0000
S0000
S0010
S0000
S0028

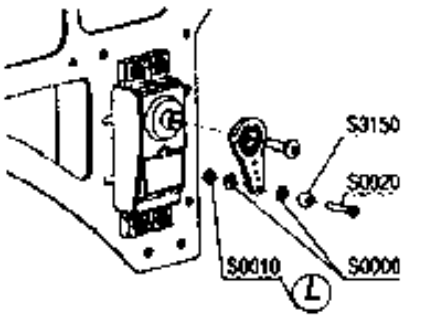
S3150
S0020
S0010
S0000

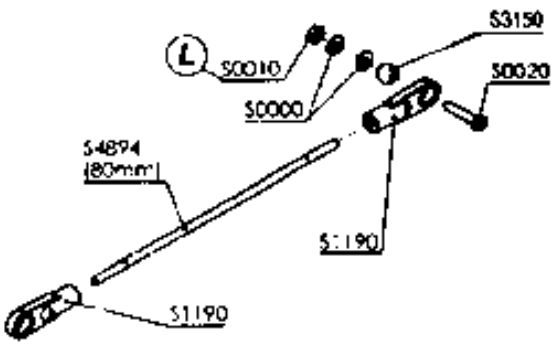
S0010
S3150
S0000
S0020
S4894
(80mm)
S1190
S1190

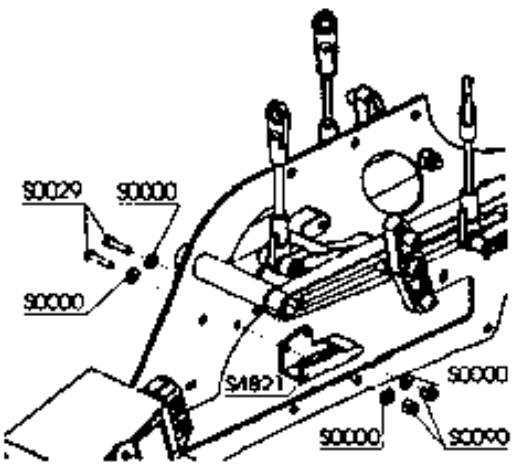
S0029
S0000
S0000
S4821
S0000
S0000
S0000

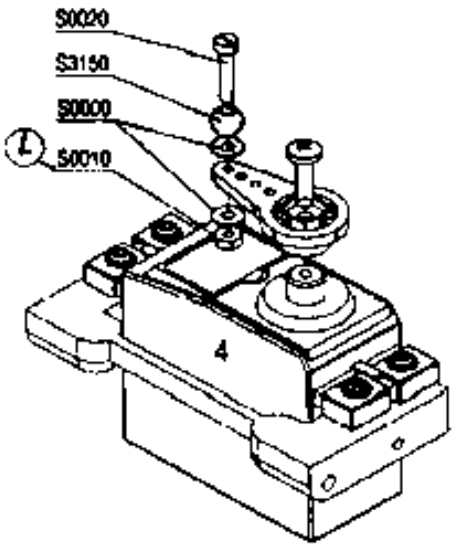
S0020
S3150
S0000
S0010
4

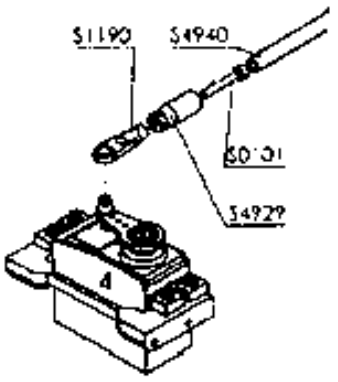
S1190
S4940
S0101
S4929
4

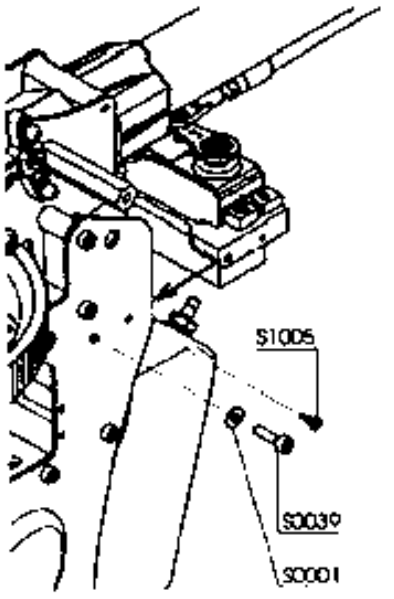
S1005
S0039
S0001

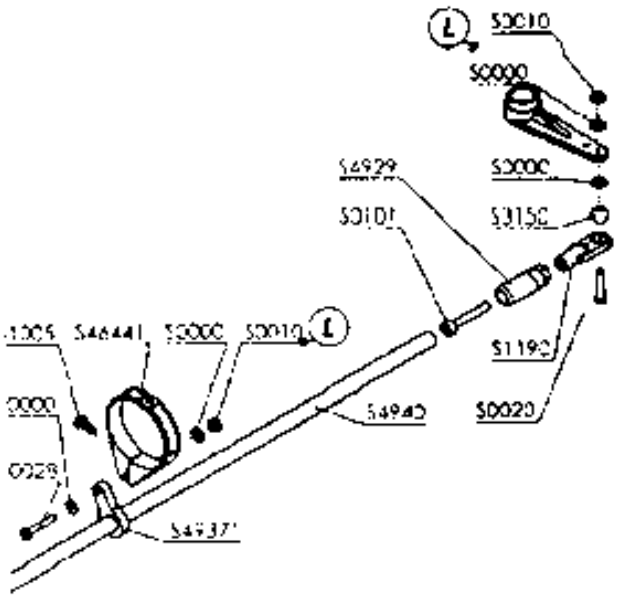
S0010
S0000
S4929
S0000
S0101
S3150
S1005
S4644L
S0000
S0010
S1190
S4940
S0020
S0000
S4937

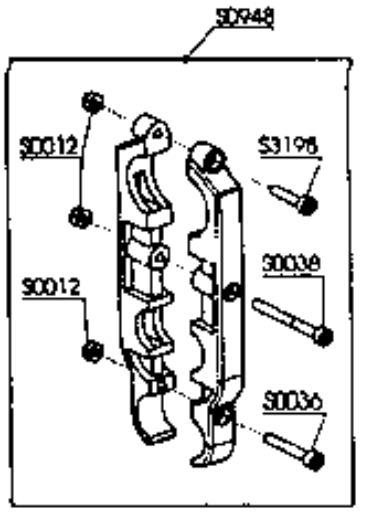
S0948
S0012
S3198
S0012
S0036
S0036

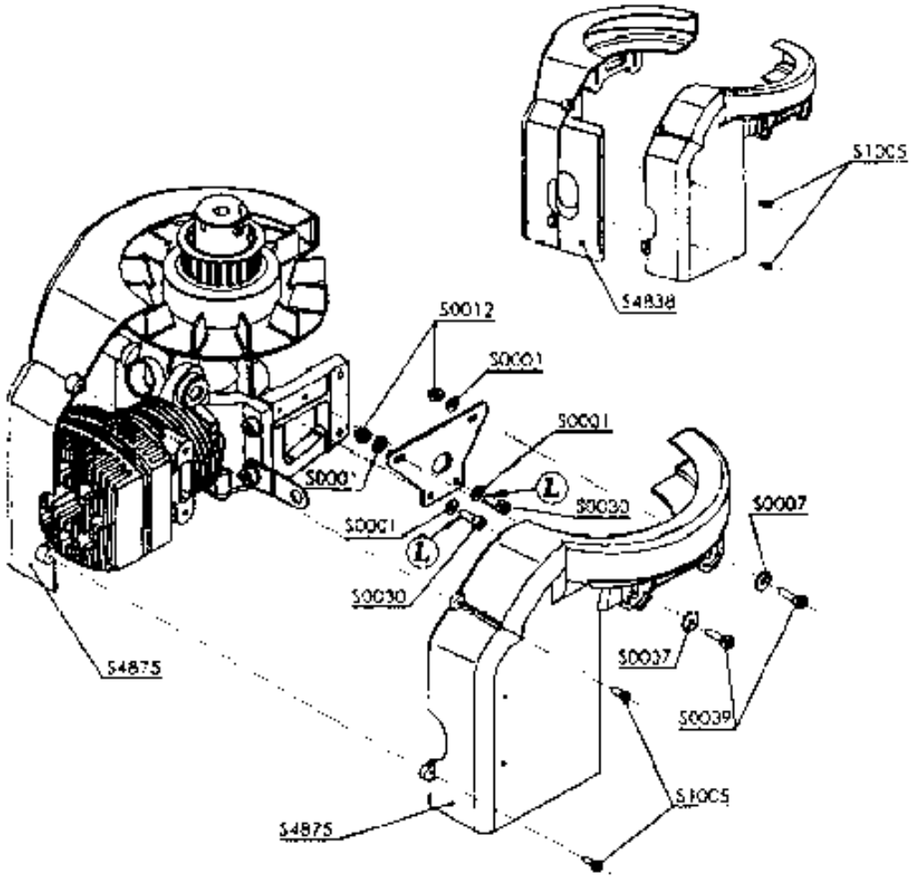
S1005
S4838
S0012
S0001
S0001
S0001
S0001
S0030
S0030
S0007
S0037
S0039
S4875
S4875
S1005

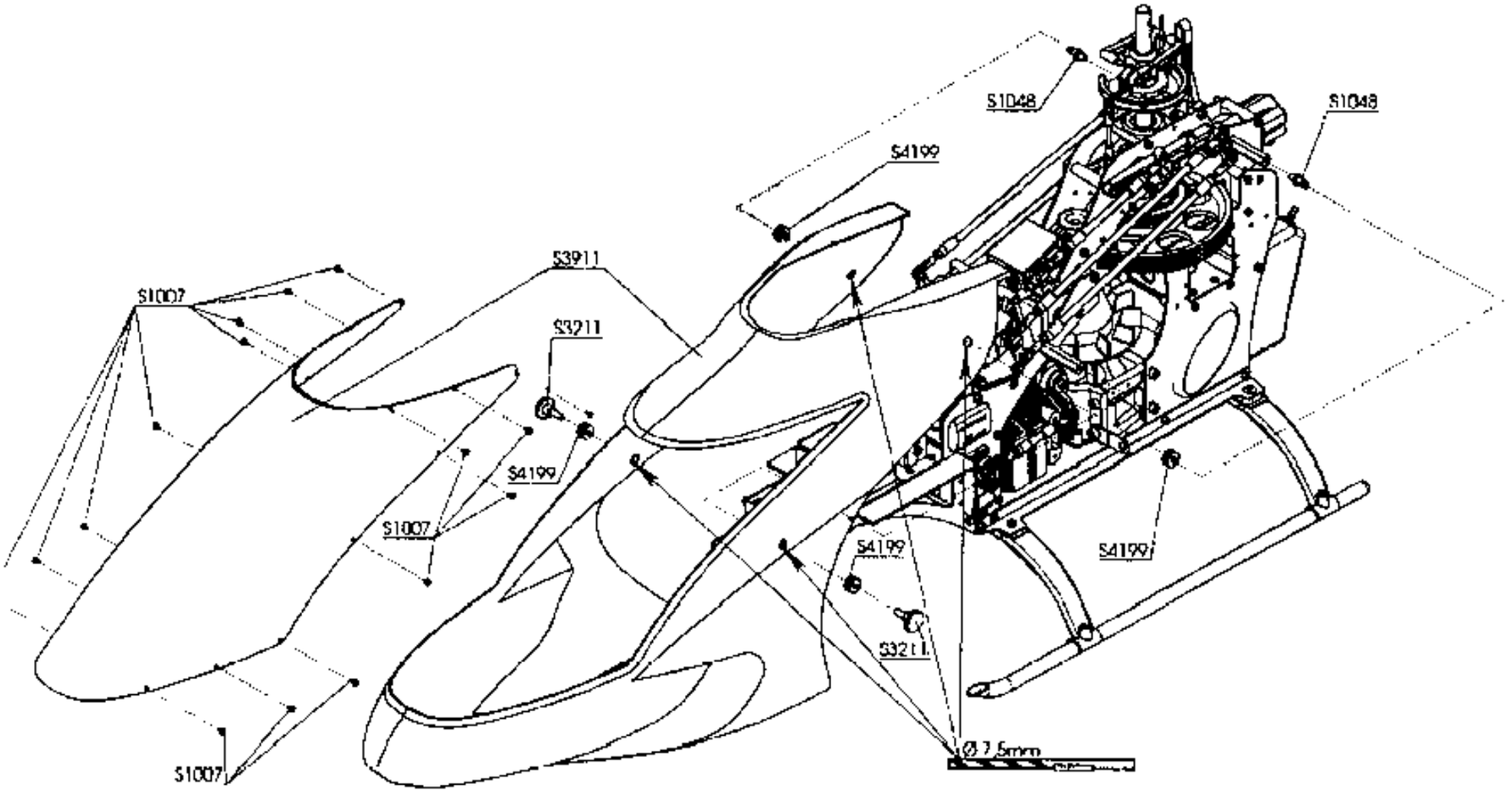
S1048
S1048
S4199
S3911
S1007
S3211
S4199
S1007
S4199
S4199
S3211
S1007
Ø 7.5mm